Specification

Items		Inner side	Outer side
Front driveshaft	Joint type	VTJ	BJ
	Max. permissible angle	23.0°	46.5°
Rear driveshaft	Joint type	TJ	BJ
	Max. permissible angle	23.0°	46.5°
Rear differential	Oil type	Hypoid gear oil (API GL-5, SAE 75W/90)	
	Oil capacity (L)	About 0.6~0.7	
	Reduction gear type	Hypoid gear	
	Reduction gear ratio	3.091	
	Final drive gear backlash mm(in.)	0.1 ~ 0.15	
	Differential gear backlash mm(in.)	0 ~ 0.05	

Tightening torque

Items		Nm	Kgf.m	lb-ft
Front	Wheel nut	88.3~107.9	9~11	65.1~79.6
	Driveshaft nut	196.1 ~ 274.5	20.0~28.0	144.6 ~ 202.5
	Strut assembly lower mounting bolt	137.2 ~ 156.9	14.0~16.0	101.2 ~ 115.7
	Break caliper mounting bolt	78.4 ~ 98.0	8.0~10.0	57.8 ~ 72.3
	Wheel speed sensor mounting bolt	6.9~10.8	0.7~1.1	5.1~8.0
	Break disc mounting screw	4.9~5.9	0.5~0.6	3.6~4.3
	Lower arm assembly mounting bolt	137.2~156.9	14~16	101.2~115.7
	Lower arm ball joint mounting bolt	98.1~117.7	10.0~12.0	72.3~86.8
	Tie rod end ball joint mounting nut	34.3 ~ 44.1	3.5~4.5	25.3 ~ 32.5
Rear	Wheel nut	88.3~107.9	9.0~11.0	65.1~79.6
	Driveshaft castle nut	196.1 ~ 274.5	20.0~28.0	144.6 ~ 202.5
	Shock absorber upper mounting nut	137.2 ~ 156.9	14.0~16.0	101.2 ~ 115.7
	Break caliper mounting bolt	78.4 ~ 98.3	8.0~10.0	57.8 ~ 72.3
	Wheel speed sensor mounting bolt	6.9~10.8	0.7~1.1	5.1~8.0
	Break disc mounting screw	4.9~5.9	0.5~0.6	3.6~4.3
	Hub assembly mounting bolt	78.5~88.3	8.0~9.0	57.9~65.1
	Upper arm ball joint mounting nut	98.1 ~ 117.7	10.0~12.0	72.3 ~ 86.8
	Lower arm mounting bolt	137.3~156.9	14.0~16.0	101.3~115.7
	Assist arm ball joint mounting nut	137.2 ~ 156.9	14.0~16.0	101.2 ~ 115.7
	Trailing arm mounting bolt	34.3 ~ 53.9	3.5~5.5	25.3 ~ 39.7
Front propellershaft	Front propeller shaft mounting bolt	49.0~68.6	5.0~7.0	36.2~50.6
	Propeller shaft center bearing bracket mounting bolt	49.0~53.9	5.0~7.0	36.2~50.6
Rear	Rear propeller shaft mounting bolt	49.0~68.6	5.0~7.0	36.2~50.6
	Rear differential mounting bolt	68.6~88.3	7.0~9.0	50.6~65.1

mcx30.com

	Rear differential drain plug	49.0~68.6	5.0~7.0	36.2~50.6
	Rear differential filler plug	39.2~58.8	4.0~6.0	28.9~43.3

CAUTION

Replace self-locking nuts with new ones after removal.

Lubricants

Items		Lubricants	Quantity
Front driveshaft	BJ	RBA	100g
	VTJ	CW-13TJ	150g
Rear driveshaft	BJ	RBA	60g
	TJ	CW-13TJ	90g

Driveshaft and axle > General Information > Special Service Tools

Special Service Tools

Tool(Number and Name)	Illustration	Use
09495-33000Puller	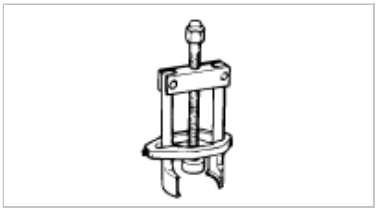	Removal of spider assembly from a drive shaft.
09517-43401Working base		Support for the differential carrier
09517-43500Adapter	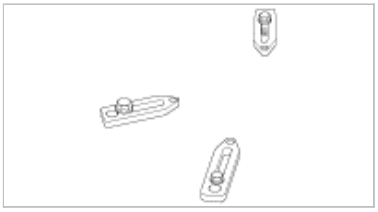	Support for the differential carrier(Use with 09517-43401)
09495-3K000Band installer	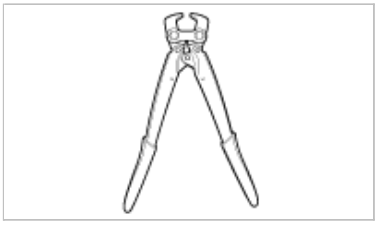	Installation of ear type boot band

Driveshaft and axle > General Information > Troubleshooting

Troubleshooting

mcx30.com

Vehicle pulls to one side	Scoring of driveshaft ball joint	Replace
	Wear, rattle or scoring of wheel bearing	Replace
	Defective front suspension and steering	Adjustment or Replace
Vibration	Wear, damage or bending of driveshaft	Replace
	Driveshaft rattle and hub serration	Replace
	Wear, rattle or scratching of wheel bearing	Replace
Shimmy	Defective wheel balance	Adjustment or Replace
	Defective front suspension and steering	Adjustment or Replace
Excessive noise	Wear, damage or bending of driveshaft	Replace
	Rattle of driveshaft and worn hub splines	Replace
	Wear, rattle or scoring of wheel bearing	Replace
	Loose hub nut	Adjustment or Replace
	Defective front suspension and steering	Adjustment or Replace

Driveshaft and axle > Front Axle Assembly > Front Hub / Knuckle / Tone Wheel > Components and Components Location

Components

mcx30.com

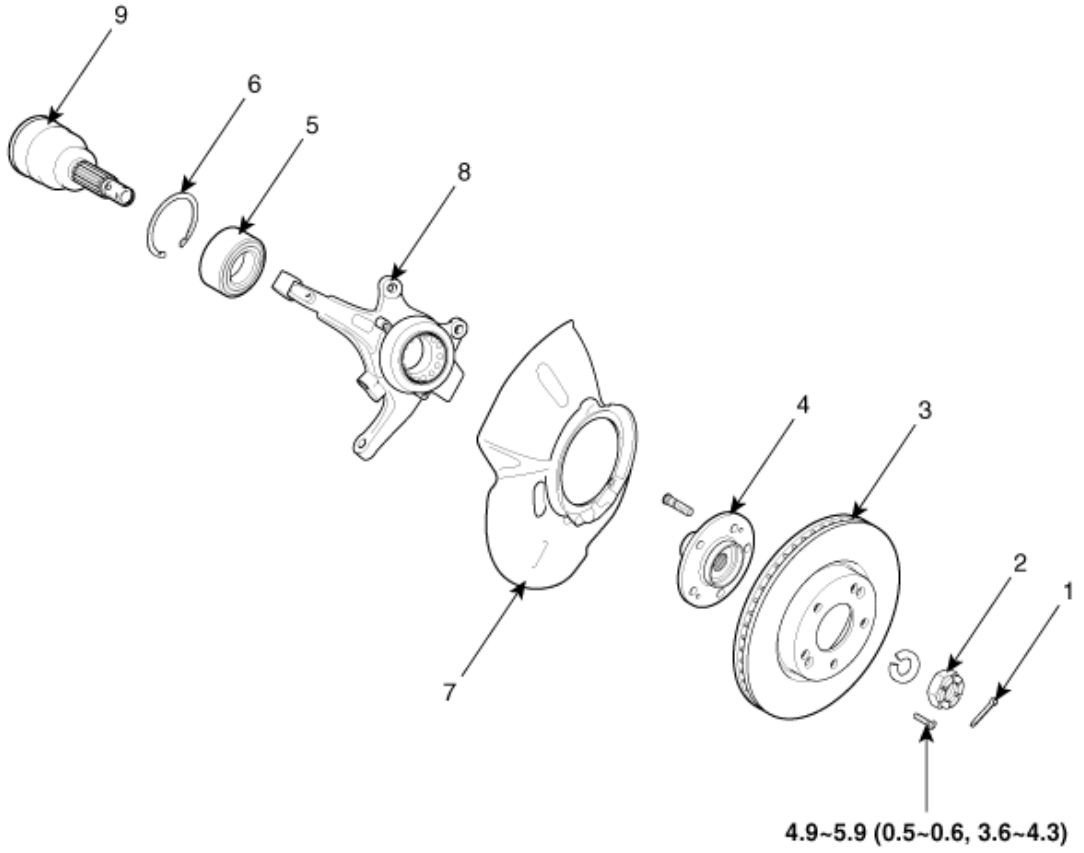

Torque : N.m (Kgf.m, lb.ft)

1. Split pin **2. Driveshaft nut** **3. Brake disc** **4. Hub** **5. Wheel bearing**	**6. Snap ring** **7. Dust cover** **8. Knuckle** **9. Driveshaft**

Driveshaft and axle > Front Axle Assembly > Front Hub / Knuckle / Tone Wheel > Repair procedures

Replacement

1. Loosen the wheel nuts slightly.
   Raise the vehicle, and make sure it is securely supported.
2. Remove the front wheel and tire (A) from front hub.

Tightening torque :
88.2 ~ 107.8 N.m(9.0 ~ 11.0 Kgf.m, 65.0 ~ 79.5 lb.ft)

mcx30.com

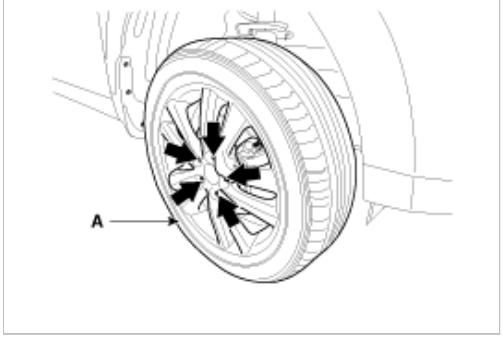

CAUTION

Be careful not to damage to the hub bolts when removing the front wheel and tire (A).

3. Remove the brake caliper mounting bolts, and then place the brake caliper assembly (B) with wire.

Tightening torque :
78.4 ~ 98.0N.m(8.0 ~ 10.0Kgf.m, 57.8 ~ 72.3lb.ft)

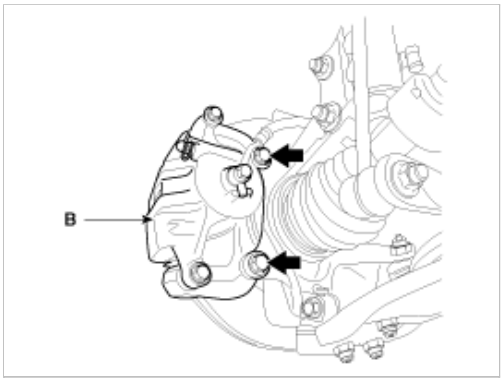

4. Remove castle nut (A) from the front hub under applying the break.

Tightening torque :
196.1 ~ 274.5N.m(20.0 ~ 28.0 Kgf.m, 144.6 ~ 202.5 lb.ft)

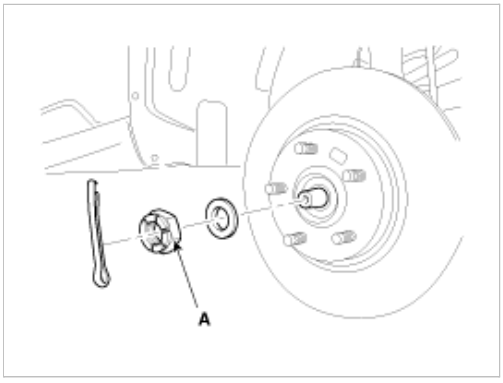

CAUTION

The washer (B) should be assembled with convex surface outward when installing the castle nut (A) and split pin (C) Also, don't reuse split pin (C) when reassembling.

mcx30.com

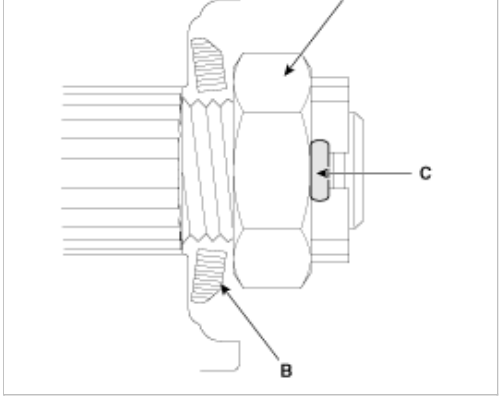

5. Remove the wheel speed sensor (B).

Tightening torque :
6.8 ~ 10.8N.m(0.7 ~ 1.1Kgf.m,5.1 ~ 7.9lb.ft)

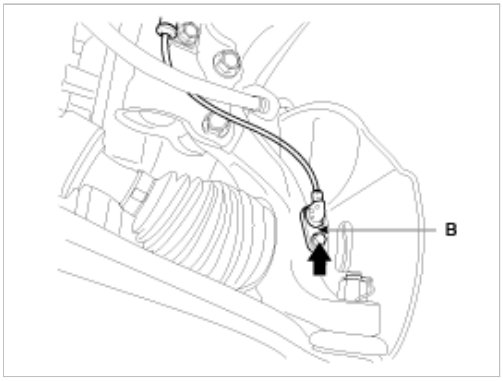

6. Remove the tie rod end ball joint(C) from the knuckle.
   (1) Remove the split pin (A).
   (2) Remove the castle nut (B).

Tightening torque :
34.3 ~ 44.1 N.m(3.5 ~ 4.5 Kgf.m, 25.3 ~ 32.5 lb.ft)

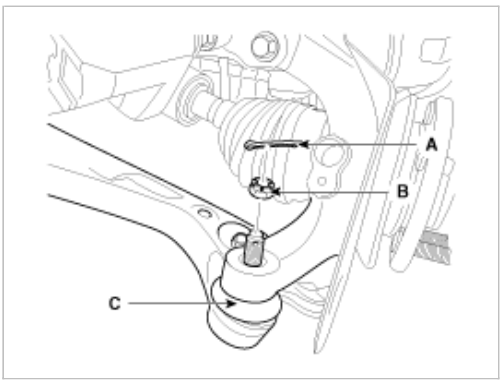

7. Remove the lower arm (A) mounting bolt from the knuckle.

Tightening torque :
98.0 ~ 117.6 N.m(10.0 ~ 12.0 Kgf.m, 72.3 ~ 86.7lb.ft)

mcx30.com

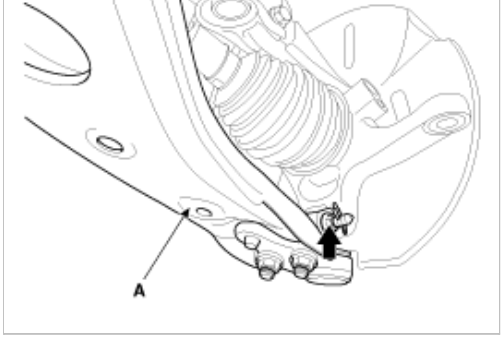

8. Disconnect the drive shaft end (A) from the knuckle.

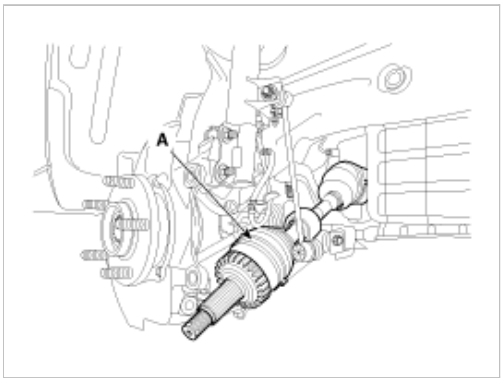

9. Loosen the strut mounting bolts and then remove the hub and knuckle assembly (A).

Tightening torque :
137.2 ~ 156.9 N.m(14.0 ~ 16.0 Kgf.m, 101.2 ~ 115.7 lb.ft)

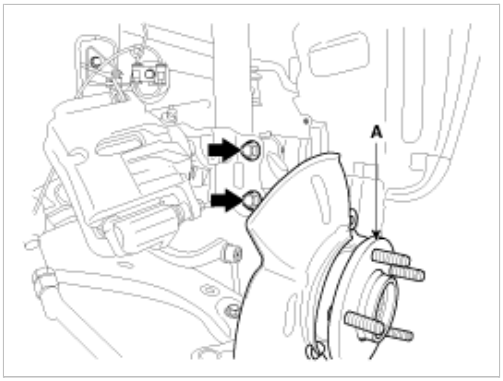

CAUTION

Be careful not to damage the boot and rotor teeth.

1. Install in the reverse order of removal.
2. Check the alignment. (Refer to SSgroup 'Tires/Wheels - alingment')

Inspection

1. Check the hub for cracks and the splines for wear.
2. Check the brake disc for scoring and damage.
3. Check the knuckle for cracks
4. Check the bearing for cracks or damage.

Disassembly

mcx30.com

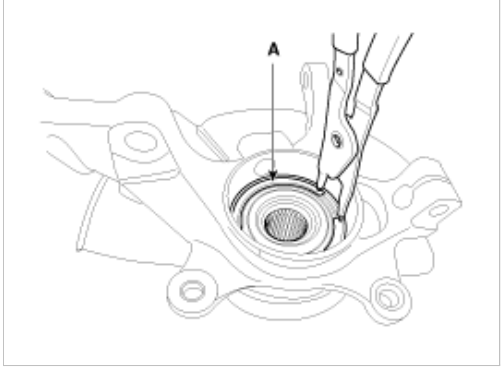

2. Remove the hub assembly from the knuckle assembly.
   (1) Install the front knuckle assembly (A) on press.
   (2) Lay a suitable adapter (B) upon the hub assembly shaft.

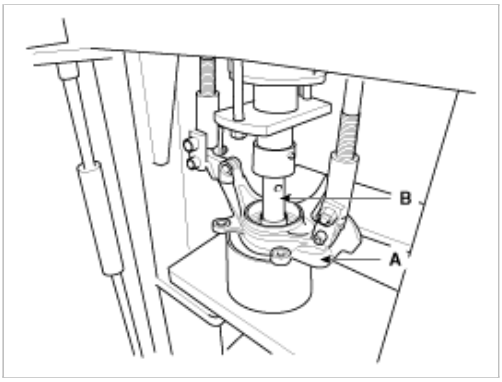

3. Remove the dust cover (A).

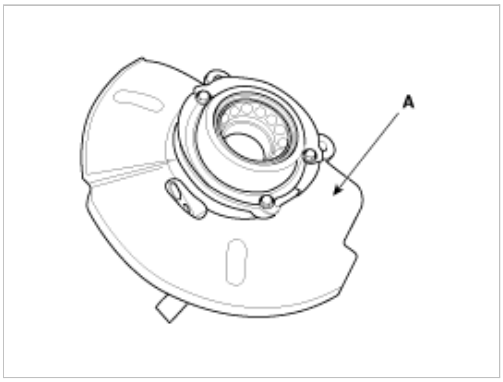

4. Remove the hub bearing inner race from the hub assembly
   (1) Install a suitable tool (A) for removing the hub bearing inner race on the hub assembly.
   (2) Lay the hub assembly and tool (A) upon a suitable adapter (B).
   (3) Lay a suitable adapter (C) upon the hub assembly shaft.
   (4) Remove the hub bearing inner race (D) from the hub assembly by using press.

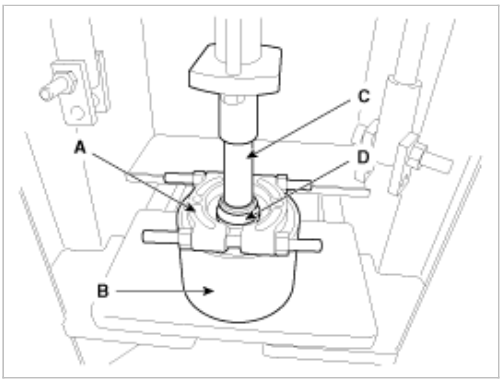

mcx30.com

(1) Lay the hub assembly (A) upon a suitable adapter (B).

(2) Lay a suitable adapter (C) upon the hub bearing outer race.

(3) Remove the hub bearing outer race from the knuckle assembly by using press.

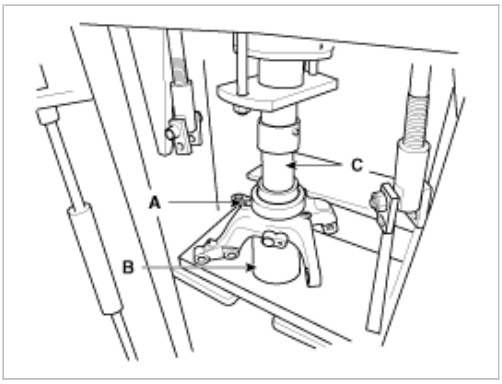

6. Replace hub bearing with a new one.

Reassembly

1. Install the dust cover (A).

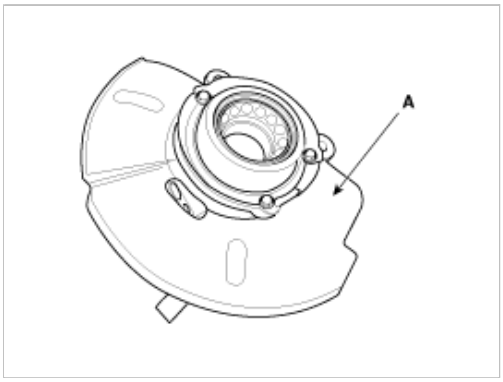

2. Install the hub bearing to the knuckle assembly.
   (1) Lay the knuckle assembly (A) on press.

   (2) Lay a new hub bearing upon the knuckle assembly (A).

   (3) Lay a suitable adapter (B) upon the hub bearing.

   (4) Install the hub bearing to the knuckle assembly by using press.

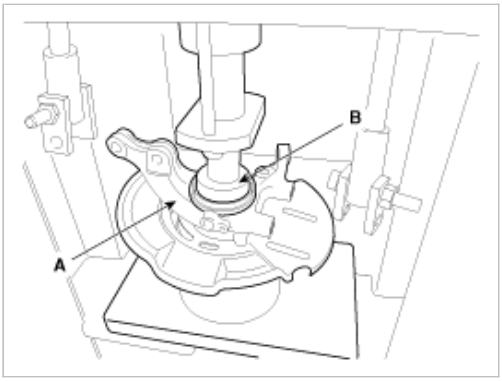

> **CAUTION**
>
> Do not press against the inner race of the hub bearing because that can cause damage to the bearing assembly.
> Always use a new wheel bearing assembly.

3. Install the hub assembly to the knuckle assembly.

mcx30.com

(2) Lay the knuckle assembly (C) upon the hub assembly (A).

(3) Lay a suitable adapter (D) upon the hub bearing.

(4) Install the hub assembly (A) to the knuckle assembly (C) by using press.

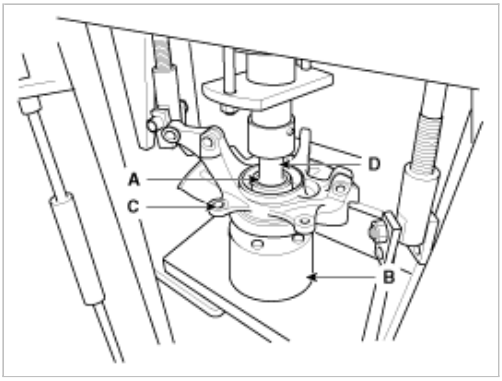

CAUTION

Do not press against the inner race of the hub bearing because that can cause damage to the bearing assembly.

4. Install the snap ring (A).

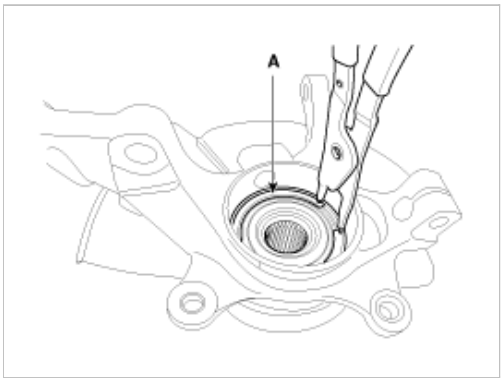

Driveshaft and axle > Driveshaft Assembly > Front Driveshaft > Components and Components Location

Components

mcx30.com

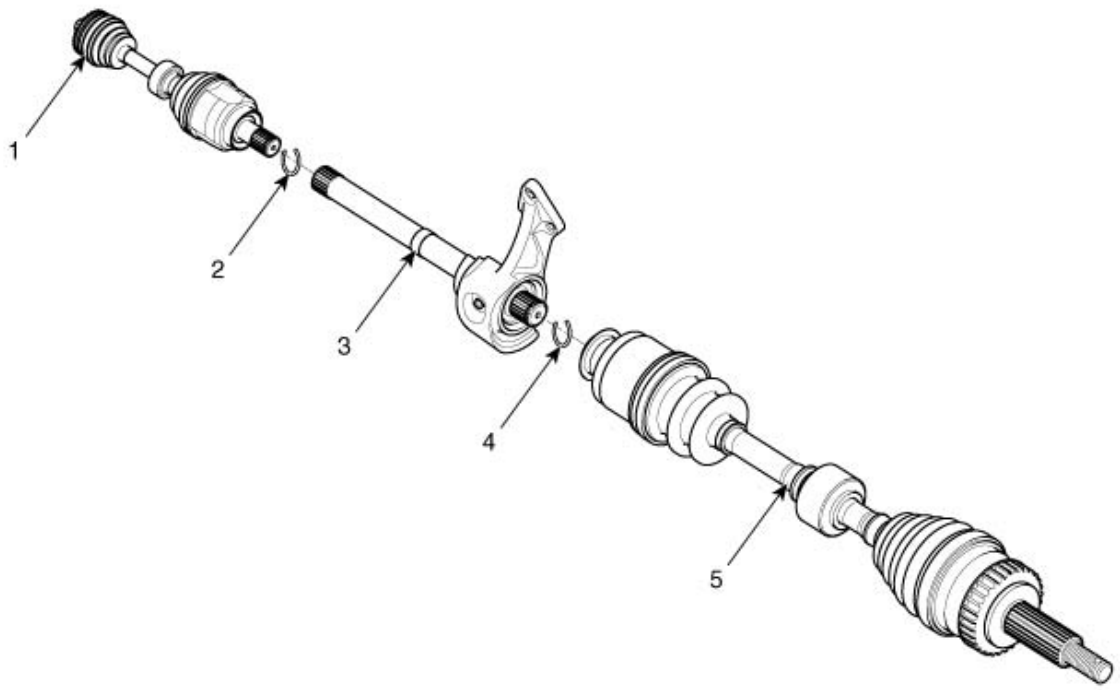

1. Front driveshaft (LH) 2. Circlip 3. inner shaft	4. Circlip 5. Front driveshaft (RH)

mcx30.com

[LH]

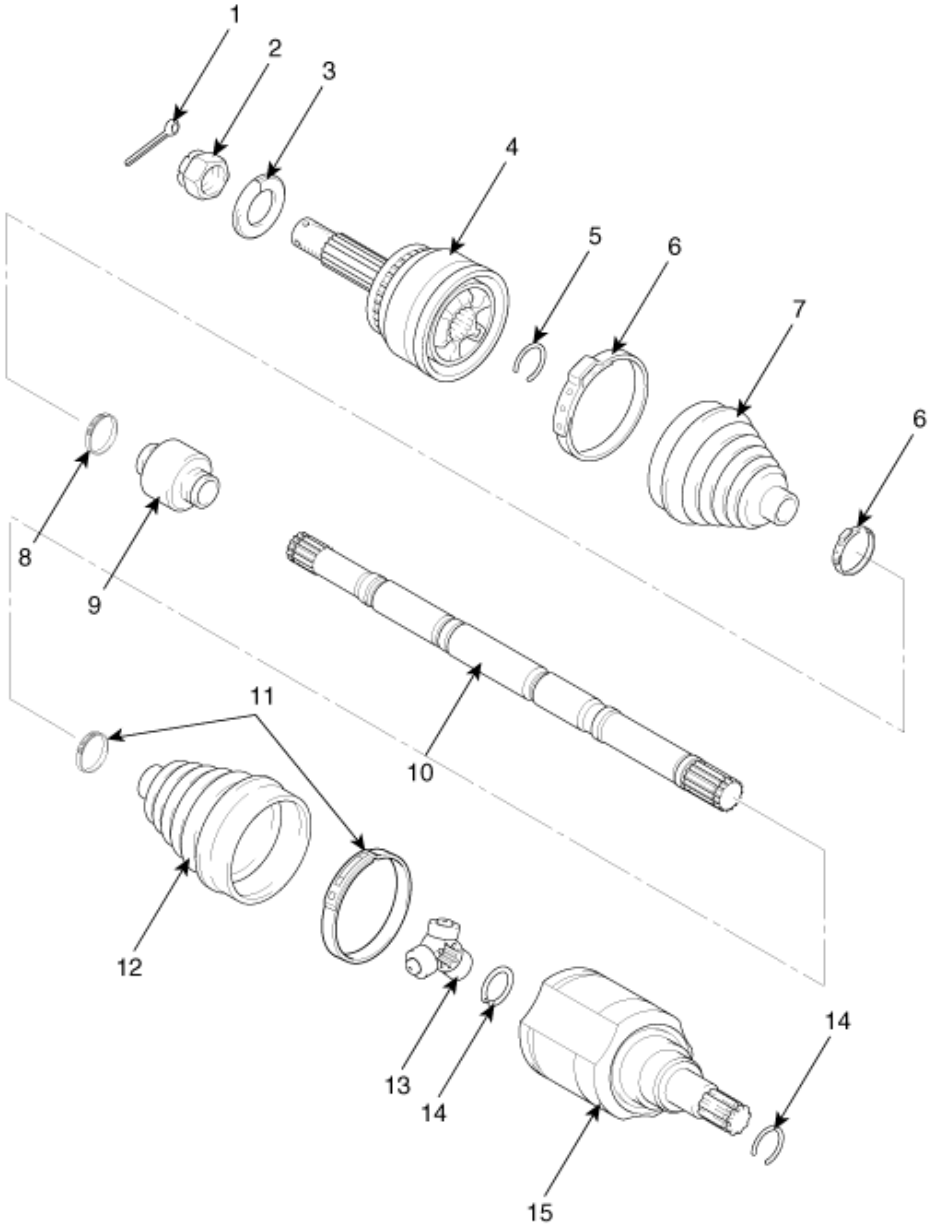

1. Split pin	6. BJ boot band	11. VTJ boot band
2. Castle nut	7. BJ boot	12. VTJ boot
3. washer	8. Dynamic damper band	13. Spider assembly
4. BJ assembly	9. Dynamic damper	14. Circlip
5. Clip A	10. Shaft	15. VTJ assembly

mcx30.com

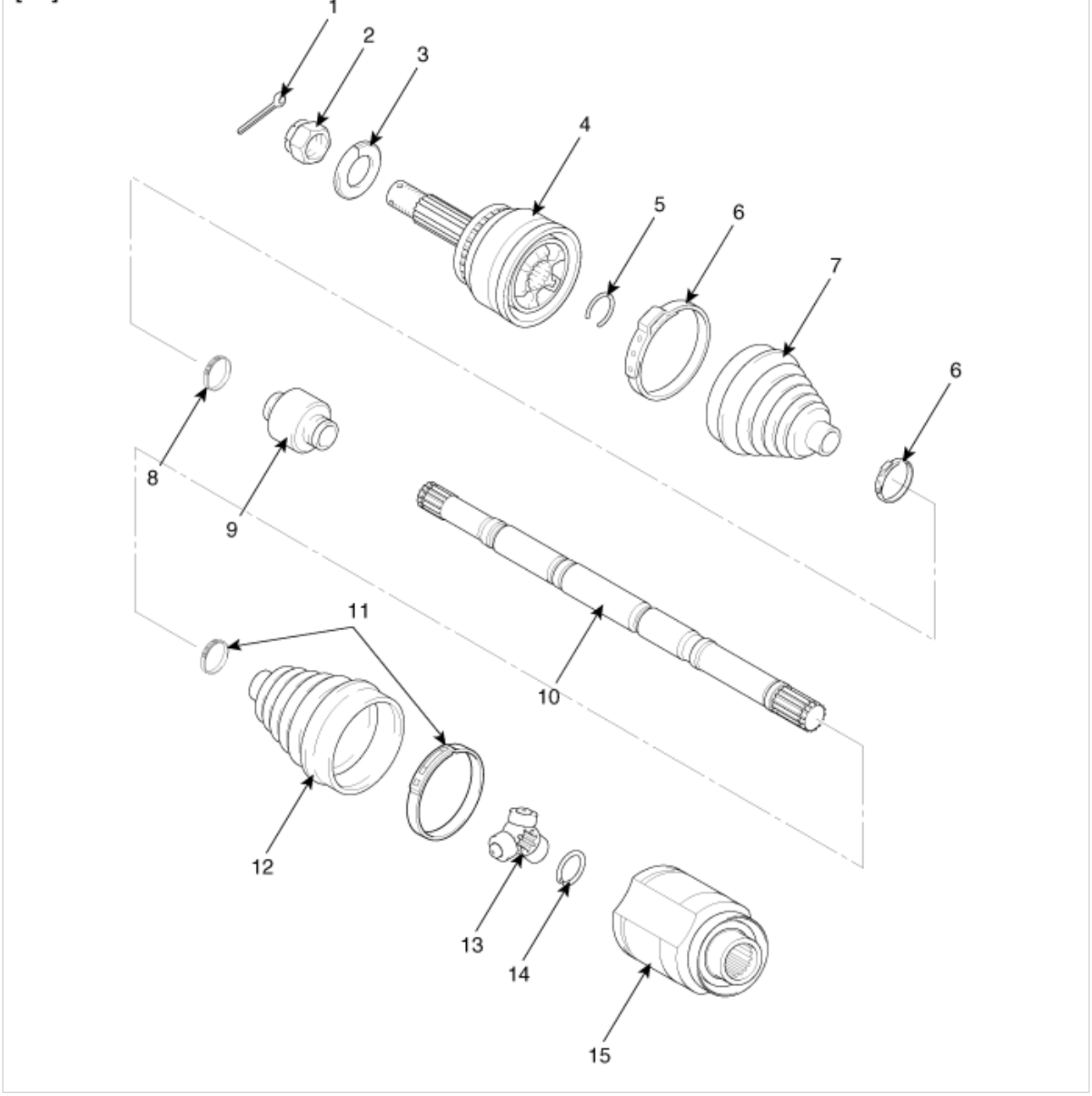

1. Split pin	6. BJ boot band	11. VTJ boot band
2. Castle nut	7. BJ boot band	12. VTJ boot
3. Washer	8. Dynamic damper band	13. Spider assembly
4. BJ assembly	9. Dynamic damper	14. Circlip
5. Clip A	10. Shaft	15. VTJ assembly

Driveshaft and axle > Driveshaft Assembly > Front Driveshaft > Repair procedures

Replacement

1. Loosen the wheel nuts slightly.
   Raise the vehicle, and make sure it is securely supported.
2. Remove the front wheel and tire (A) from front hub.

Tightening torque :
88.2 ~ 107.8 N.m(9.0 ~ 11.0 Kgf.m , 65.0 ~ 79.5 lb.ft)

mcx30.com

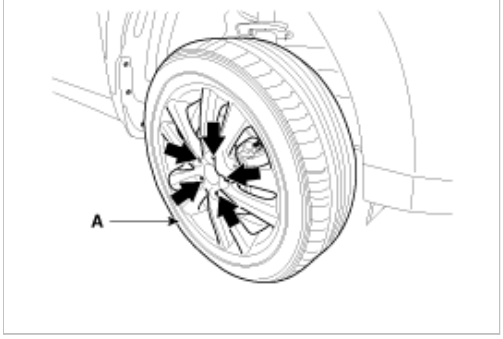

CAUTION

Be careful not to damage to the hub bolts when removing the front wheel and tire (A).

3. Remove the brake caliper mounting bolts, and then place the brake caliper assembly (B) with wire.

Tightening torque :
78.4 ~ 98.0N.m(8.0 ~ 10.0Kgf.m, 57.8 ~ 72.3lb.ft)

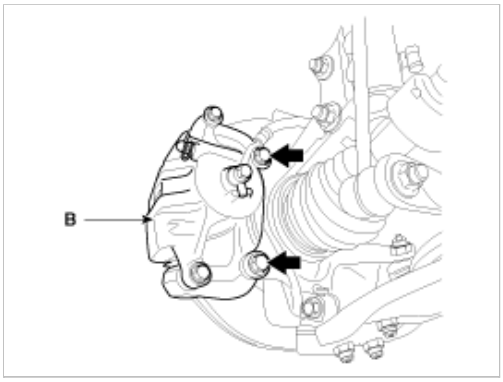

4. Remove castle nut (A) from the front hub under applying the break.

Tightening torque :
196.1 ~ 274.5N.m(20.0 ~ 28.0Kgf.m, 144.6 ~ 202.5lb.ft)

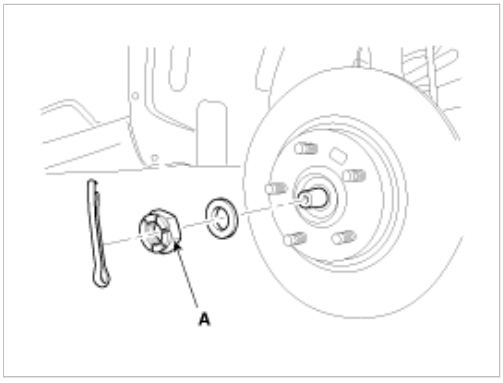

CAUTION

The washer (B) should be assembled with convex surface outward when installing the castle nut (A) and split pin (C) Also, don't reuse split pin (C) when reassembling.

mcx30.com

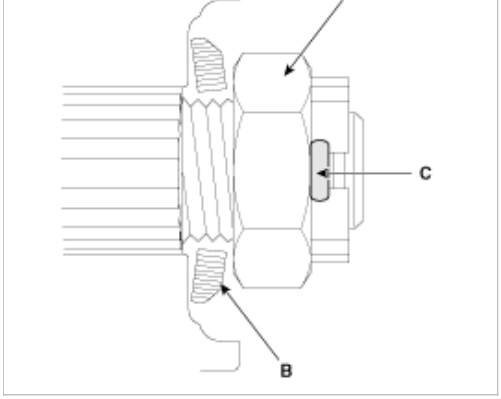

5. Remove the wheel speed sensor (B).

Tightening torque :
6.8 ~ 10.8N.m(0.7 ~ 1.1Kgf.m,5.1 ~ 7.9lb.ft)

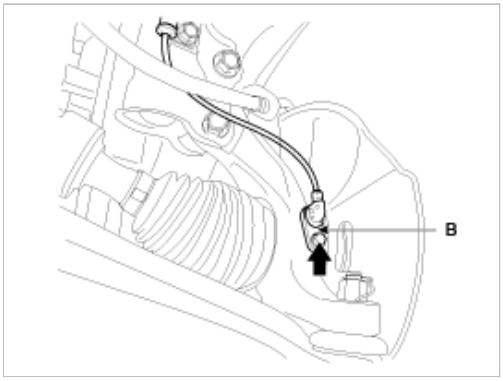

6. Remove the tie rod end ball joint(C) from the knuckle.
   (1) Remove the split pin (A).
   (2) Remove the castle nut (B).

Tightening torque :
34.3 ~ 44.1N.m(3.5 ~ 4.5Kgf.m, 25.3 ~ 32.5 lb.ft)

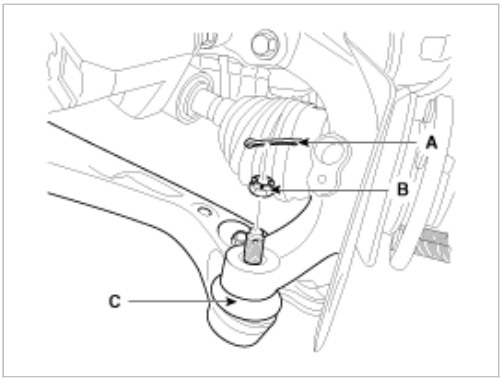

CAUTION

Apply a few drops of oil to the special tool. (Boot contact part)

7. Remove the lower arm (A) mounting bolt from the knuckle.

Tightening torque :
98.0 ~ 117.6N.m(10.0 ~ 12.0Kgf.m,72.3 ~ 86.7lb.ft)

mcx30.com

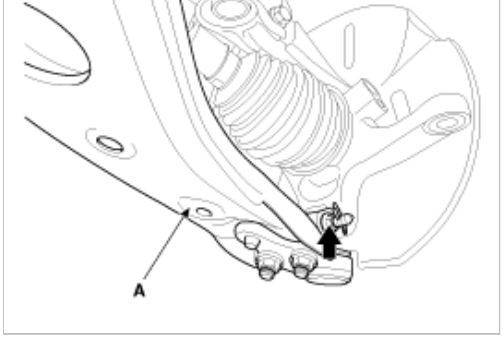

8. Disconnect the drive shaft end (A) from the knuckle.

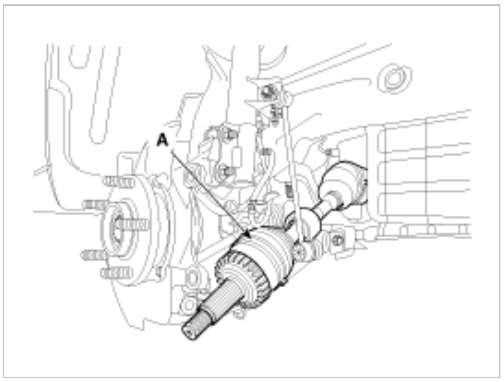

9. Remove the driveshaft assembly (A) from the inner shaft.

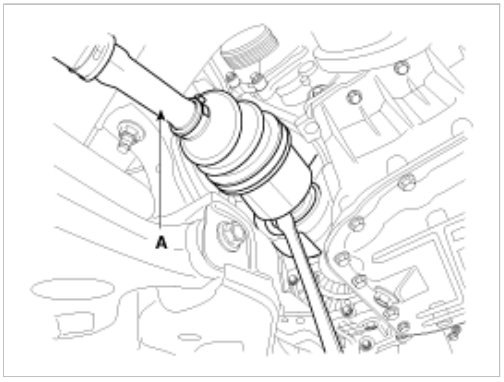

10. Inner shaft mounting bolts and then disconnect the inner shaft (A).

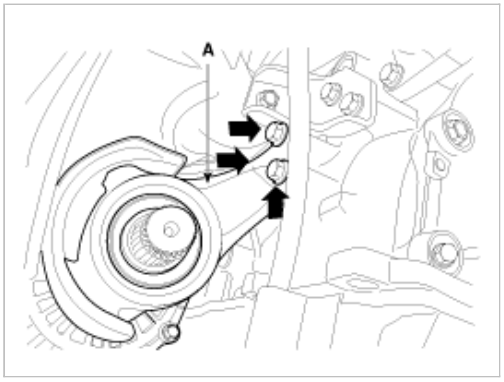

11. Insert a pry bar (A) between the transaxle case and joint case , and separate the driveshaft (B) from the transaxle case.

mcx30.com

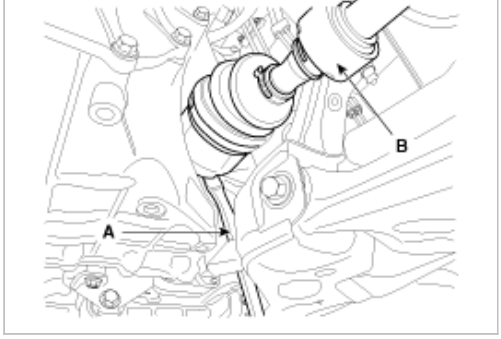

12. Install in the reverse order of removal.

> **CAUTION**
>
> - Use a pry bar (A) being careful not to damage the transaxle and joint.
> - Do not insert the pry bar(A) too deep, as this may cause damage to the oil seal.
> - Do not pull the driveshaft by excessive force it may cause components inside the joint kit to dislodge resulting in a torn boot or a damaged bearing.
> - Plug the hole of the transaxle case with the oil seal cap to prevent contamination.
> - Support the driveshaft properly.
> - Replace the retainer ring whenever the driveshaft is removed from the transaxle case.

13. Check the alignment. (Refer to SSgroup 'Tires/Wheels - alingment')

Inspection

1. Check the driveshaft boots for damage and deterioration.
2. Check the ball joint for wear and damage.
3. Check the splines for wear and damage.
4. Check the dynamic damper for cracks, wear and position.

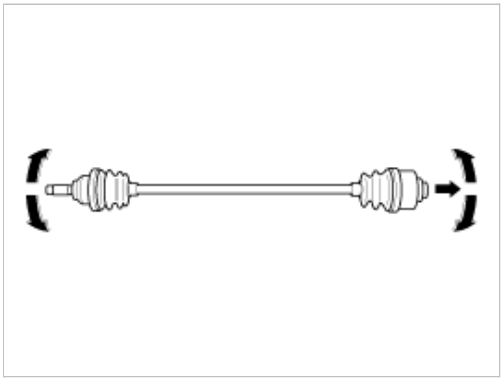

5. Check the driveshaft for cracks and wears.

Disassembly

> **CAUTION**
>
> - Do not disassemble the BJ assembly.
> - Special grease must be applied to the driveshaft joint. Do not substitute with another type of grease.
> - The boot band should be replaced with a new one.

1. Remove the circlip (B) from driveshaft splines (A) of the transaxle side VTJ case.

mcx30.com

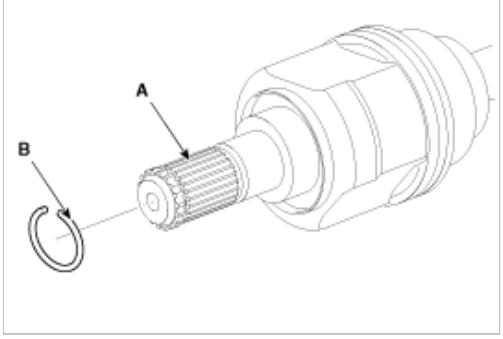

2. Remove the both boot clamps from the transaxle side VTJ case. Using a flat-tipped (-) screwdriver, remove the both clamps of the transaxle side.

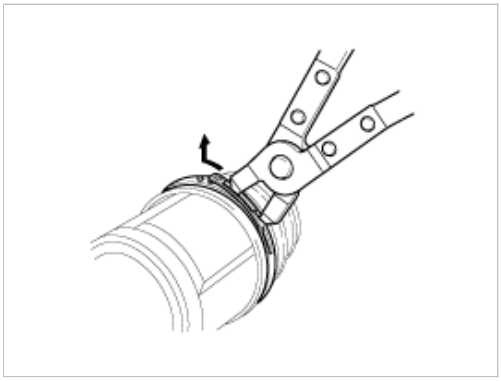

3. Pull out the boot from the transaxle side joint (VTJ).
4. While dividing joint boot (A) of the transaxle side, wipe the grease in VTJ case (B) and collect them respectively.

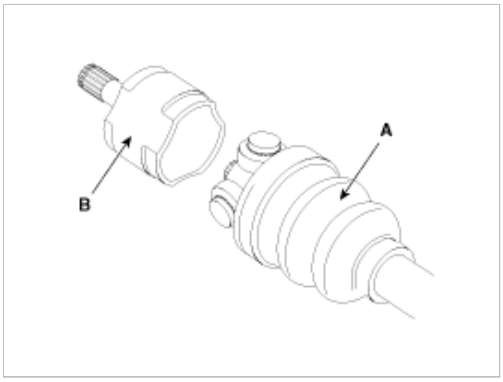

CAUTION

- Be careful not to damage the boot.
- According to below the illustrated, put marks (D) on roller of spider assembly (A), VTJ case (B) and spline part (C), for providing assembly.

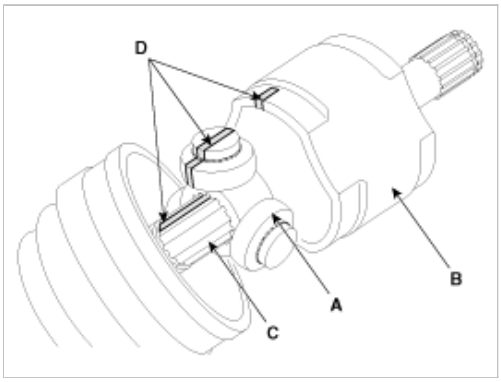

5. Using a snap ring plier or flat-tipped (-) screwdriver, remove the circlip (A).

mcx30.com

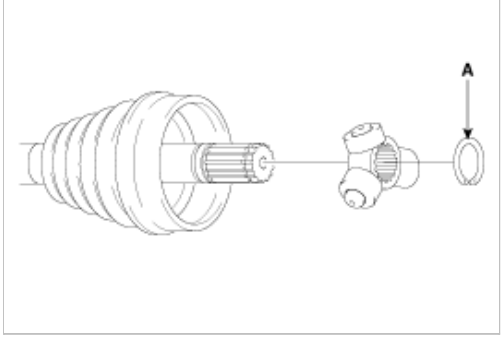

6. Remove the spider assembly (B) from the driveshaft (A) using the special tool (09495-33000).

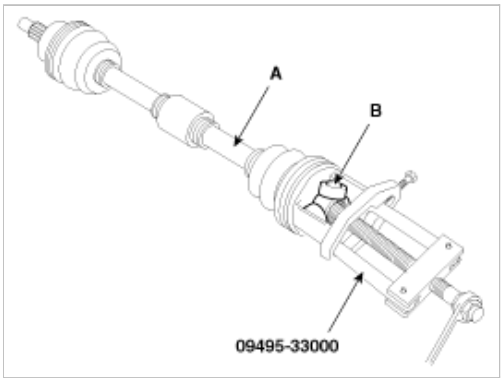

7. Clean the spider assembly.
8. Remove the boot (A) of the transaxle side joint (VTJ).

> **CAUTION**
>
> For reusing the boot (A), wrap tape (B) around the driveshaft splines (C) to protect the boot (A).

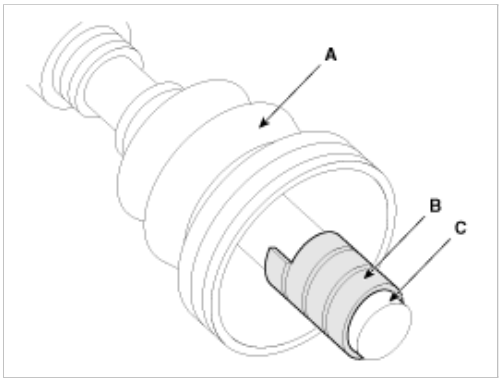

9. Using a plier or flat-tipped (-) screwdriver, remove the clamp (B) of the dynamic damper (A).

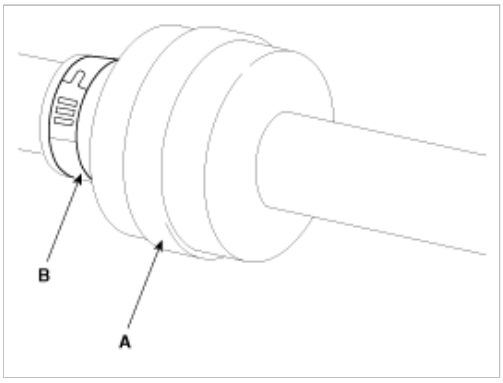

10. Fix the driveshaft (A) with a vice (B) as illustrated.

mcx30.com

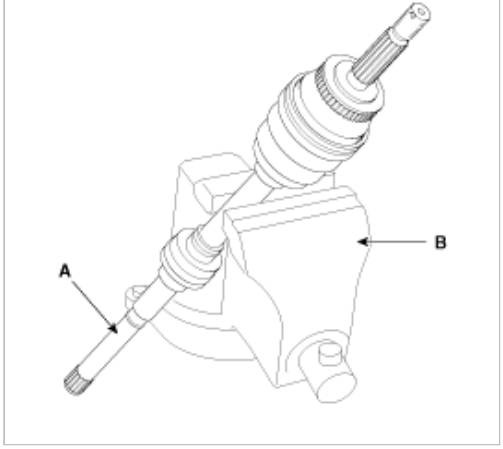

11. Apply soap powder on the shaft to prevent being damaged between the shaft spline and the dynamic damper when the dynamic damper is removed.
12. Saperate the dynamic damper (A) from the shaft (B) carefully.

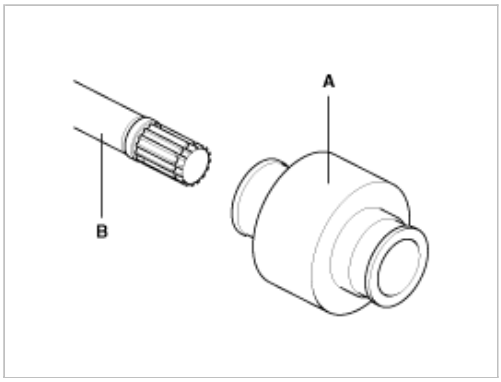

13. Using a plier or flat-tipped (-) screwdriver, remove the clamp on the side of wheel.

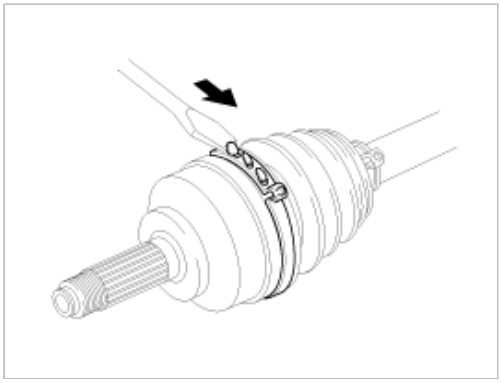

14. Pull out the joint(BJ) on the side of wheel into the transaxle direction. Be careful not to damage the boot.

Reassembly

1. Wrap tape around the driveshaft splines (VTJ. side) to prevent damage to the boots.
2. Apply grease to the driveshaft and install the BJ boots.
3. Install the bands to both BJ boots.

mcx30.com

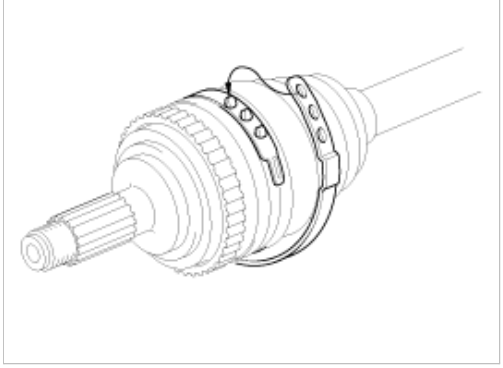

4. To reassemble the dynamic damper (A), keeping the shaft (B) in the straight, tighten the dynamic damper (A) with dynamic damper band (C), as the illustration.

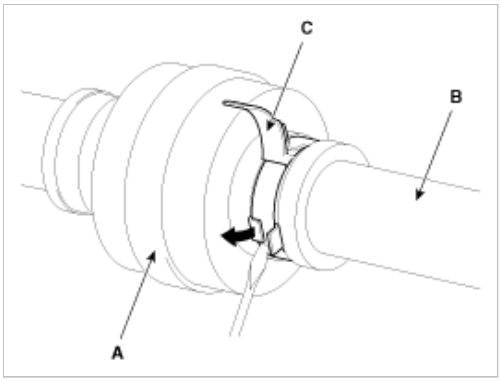

5. Install the VTJ boot bands and VTJ boot.
6. Install the spider assembly (A) and the circlip (E) to the spline (C) on the driveshaft.
   At this time align the marks (D) each other.

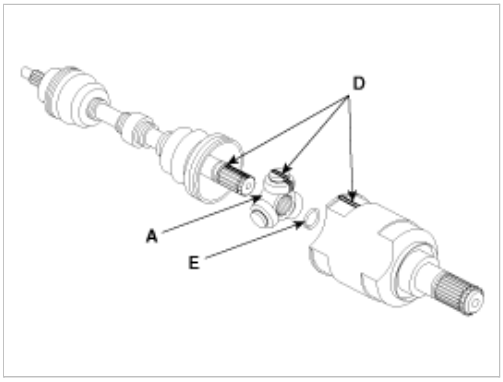

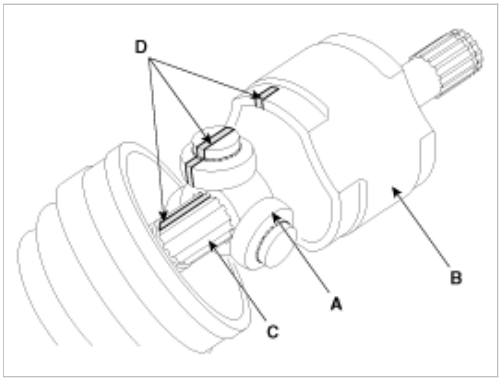

7. Install the clip to the VTJ case (B).
8. Add the specified grease to the VTJ as mush as wiped away at inspection.
9. Install the VTJ boots.
10. Install the bands to both VTJ boots.

mcx30.com

Clearance (A) : 2.0 mm (0.079 in.) or less

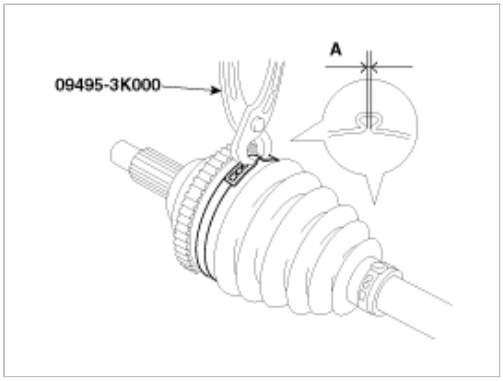

12. To control the air in the VTJ boot, keep the specified distance between the boot bands when they are tightened.

Distance (A)	LH side	RH side
Gasoline 2.0/2.4 AT 2WD(mm)	536.6 +26.8/-20.2	827.5 +26.8/-20.2
Gasoline 2.0/2.4 AT 4WD(mm)	536.6 +26.8/-20.2	511.4 +26.8/-20.2
Gasoline 2.0 MT 2WD(mm)	557.9 +26.8/-20.2	839.7 +26.8/-20.2
Gasoline 2.0 MT 4WD(mm)		511.4 +26.8/-20.2
Gasoline 2.4 MT 2WD(mm)	542.0 +26.8/-20.2	855.4 +26.8/-20.2
Gasoline 2.4 MT 4WD(mm)		511.4 +26.8/-20.2

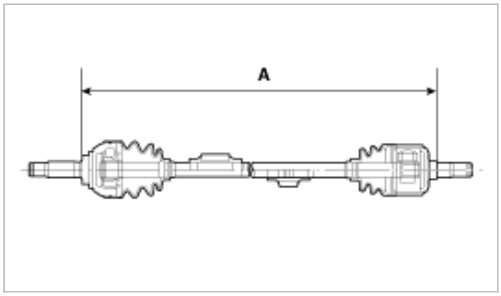

Driveshaft and axle > Rear Axle Assembly > Rear Hub - Carrier > Components and Components Location

Components

mcx30.com

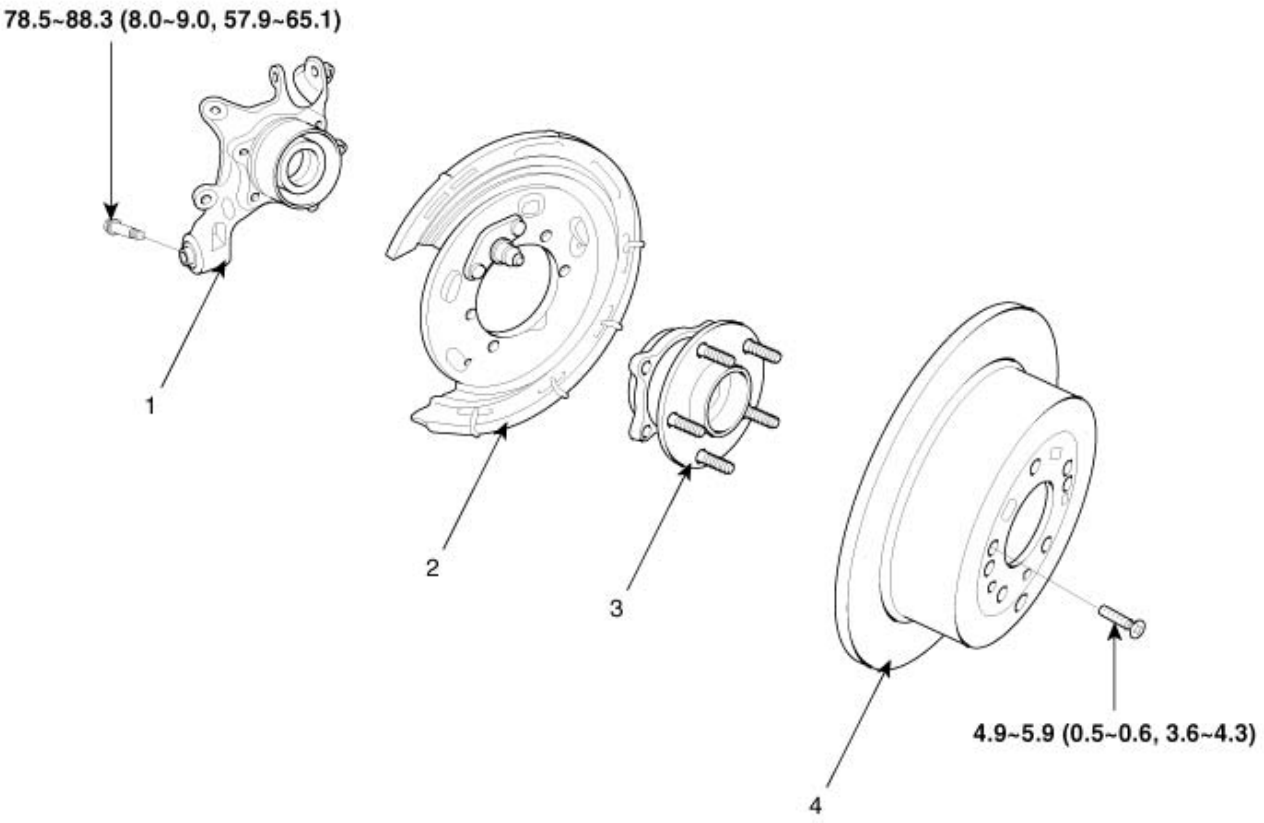

Torque : N.m (Kgf.m, lb.ft)

1. Rear carrier assembly 2. Parking brake assembly	3. Rear hub assembly 4. Rear brake disc

Driveshaft and axle > Rear Axle Assembly > Rear Hub - Carrier > Repair procedures

Replacement

1. Loosen the wheel nuts slightly. Raise the vehicle, and make sure it is securely supported.
2. Remove the rear wheel and tire (A) from rear hub.

Tightening torque :
88.2 ~ 107.9 N.m(9.0 ~ 11.0 Kgf.m , 65.0 ~ 79.5 lb.ft)

mcx30.com

CAUTION

Be careful not to damage to the hub bolts when removing the rear wheel and tire (A).

3. Remove the brake caliper mounting bolts , and then place the brake caliper assembly (B) with wire.

Tightening torque :
78.4 ~ 98.0N.m(8.0 ~ 10.0Kgf.m, 57.8 ~ 72.3lb.ft)

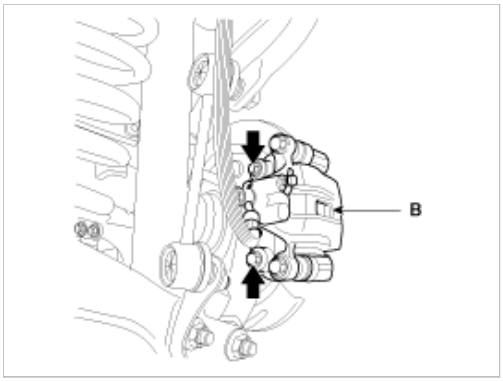

4. Remove castle nut (A) from the front hub under applying the break.

Tightening torque :
196.1 ~ 274.5N.m(20.0 ~ 28.0Kgf.m, 144.6 ~ 202.5lb.ft)

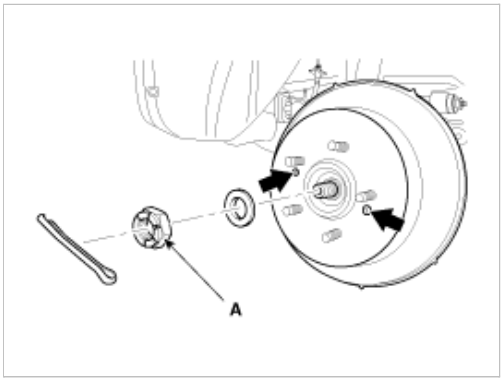

CAUTION

The washer (B) should be assembled with convex surface outward when installing the castle nut (A) and split pin (C) Also, don't reuse split pin (C) when reassembling.

mcx30.com

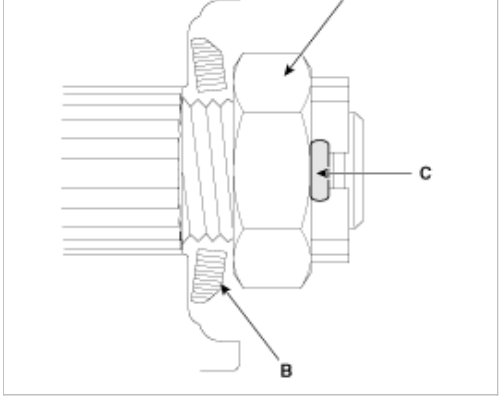

5. Remove the rear brake lining assembly (A).(Refer to BR group-Rear brake)

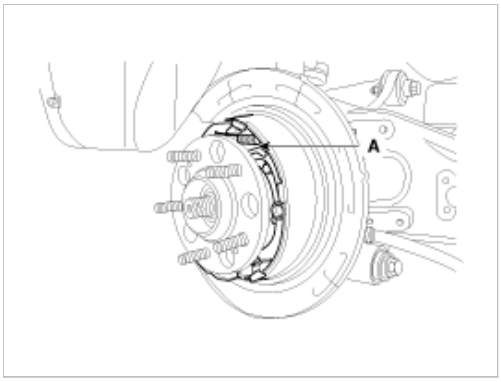

6. Remove the parking brake cable (B) from the brake shoe (A).

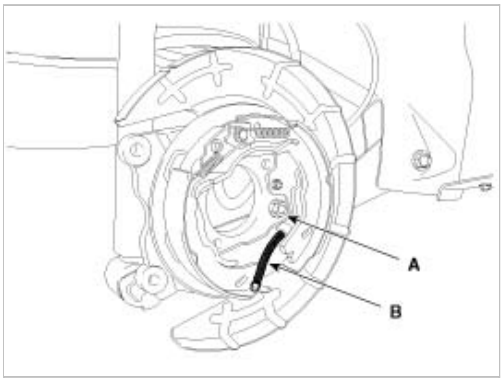

7. Remove the parking brake cable retaining (B), from the parking brake cabel (A).

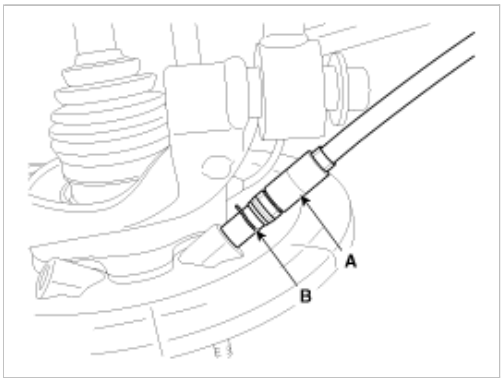

8. Remove the wheel speed sensor (A), from the knuckle.

Tightening torque :
6.8 ~ 10.8N.m(0.7 ~ 1.1Kgf.m,5.1 ~ 7.9lb.ft)

mcx30.com

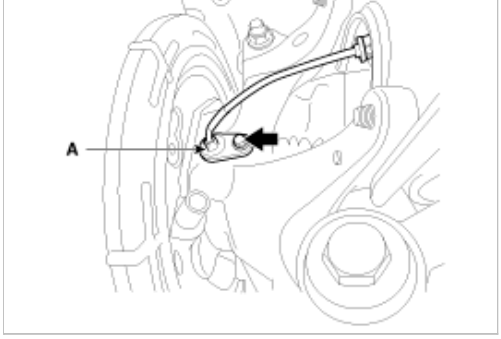

9. Remove the assist arm (A) from the rear axle carrier.

Tightening torque :
137.2 ~ 156.9N.m(14.0 ~ 16.0Kgf.m,101.2 ~ 115.7 lb.ft)

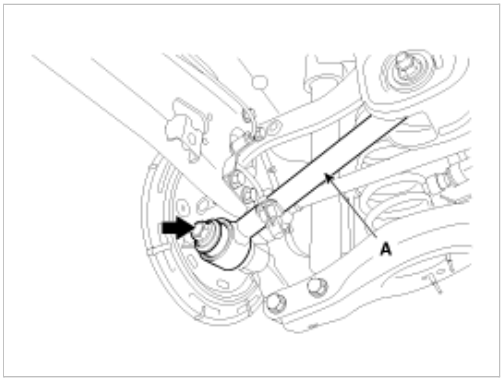

10. Remove the trailing arm (B) from the rear axle carrier.

Tightening torque :
34.3 ~ 53.9N.m(3.5 ~ 5.5Kgf.m,25.3 ~ 39.7lb.ft)

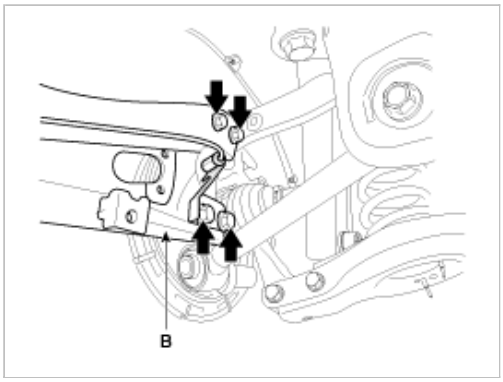

11. Remove the upper arm (A) from the rear axle carrier.

Tightening torque :
98.0 ~ 117.6N.m(10.0 ~ 12.0Kgf.m,72.3 ~ 86.7lb.ft)

mcx30.com

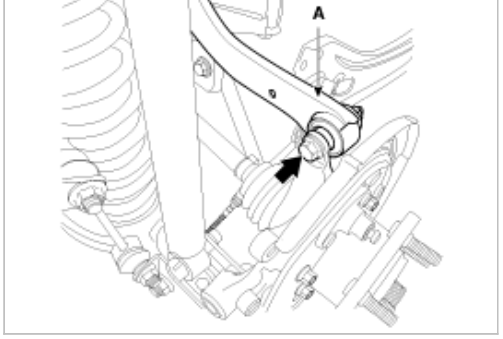

12. Push the rear axle carrier outward and separate the driveshaft (A) from the axle hub .

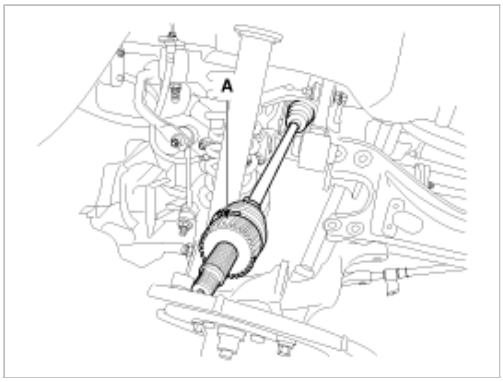

13. Remove the lower arm (A) from the rear axle carrier(B).

Tightening torque :
137.2 ~ 156.9N.m(14.0 ~ 16.0Kgf.m,101.2 ~ 115.7lb.ft)

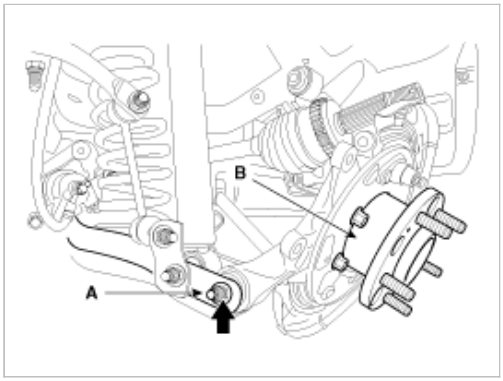

14. Install in the reverse order of removal.
15. Check the alignment. (Refer to SSgroup 'Tires/Wheels - alingment')

Inspection

1. Check the hub for cracks and the splines for wear.
2. Check the brake disc for scoring and damage.
3. Check the rear axle carrier for cracks
4. Check the bearing for cracks or damage.

Driveshaft and axle > Rear Driveshaft Assembly > Rear Driveshaft > Components and Components Location

Component location

mcx30.com

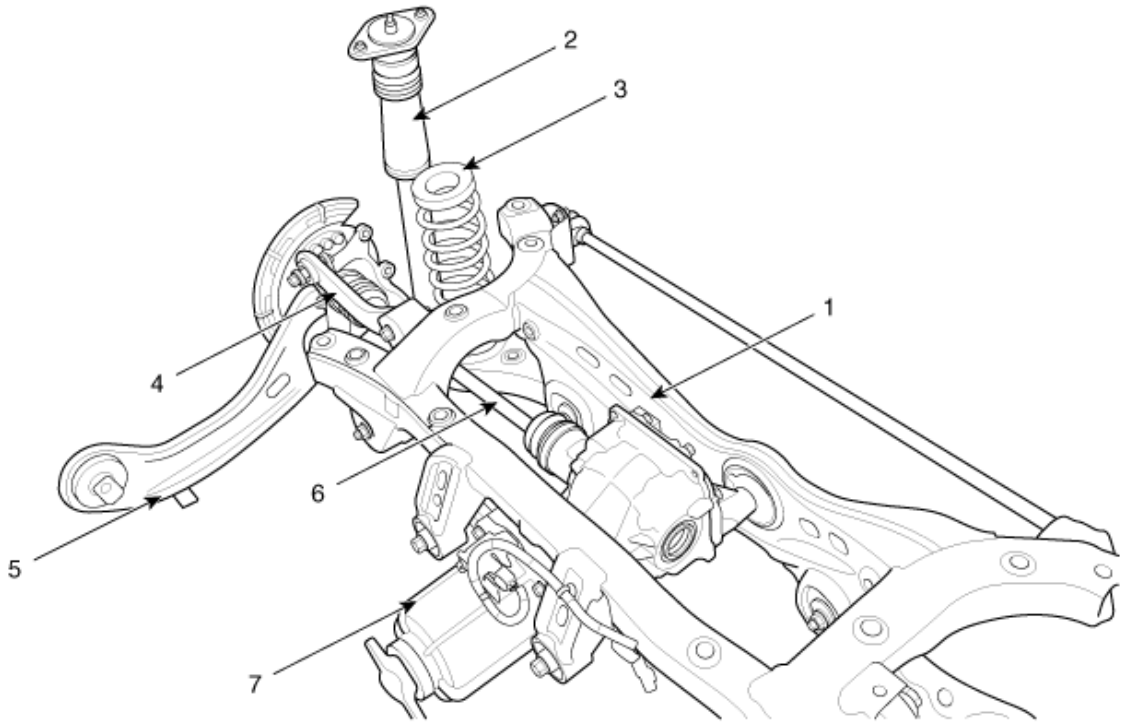

1. Sub frame 2. Rear sock absorber 3. Coil spring 4. Rear upper arm	5. Trailing arm 6. Rear drive shaft 7. Differential carrier assembly

Components

mcx30.com

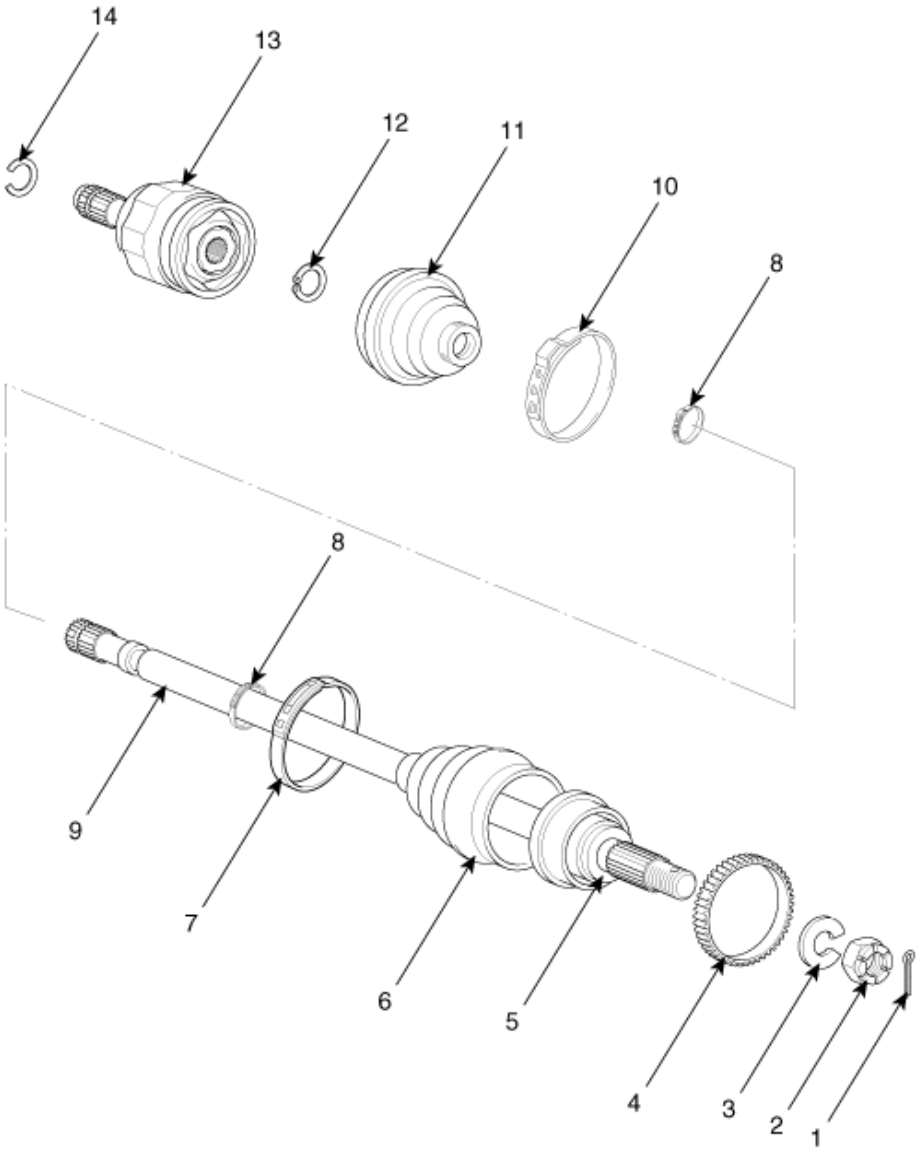

1. Split pin 2. Castle nut 3. Washer 4. Tone wheel 5. BJ assembly	6. BJ boot 7. BJ boot big part band 8. Boot small part band 9. Shaft 10. TJ boot big part band	11. TJ boot 12. Snap ring 13. TJ assembly 14. Circlip

Driveshaft and axle > Rear Driveshaft Assembly > Rear Driveshaft > Repair procedures

Replacement

1. Loosen the wheel nuts slightly.
   Raise the vehicle, and make sure it is securely supported.
2. Remove the rear wheel and tire (A) from rear hub.

Tightening torque :
88.2 ~ 07.8 N.m(9.0 ~ 11.0 Kgf.m , 65.0 ~ 79.5 lb.ft)

mcx30.com

CAUTION

Be careful not to damage to the hub bolts when removing the rear wheel and tire (A).

3. Remove the brake caliper mounting bolts , and then place the brake caliper assembly (B) with wire.

Tightening torque :
78.4 ~ 98.0N.m(8.0 ~ 10.0Kgf.m, 57.8 ~ 72.3lb.ft)

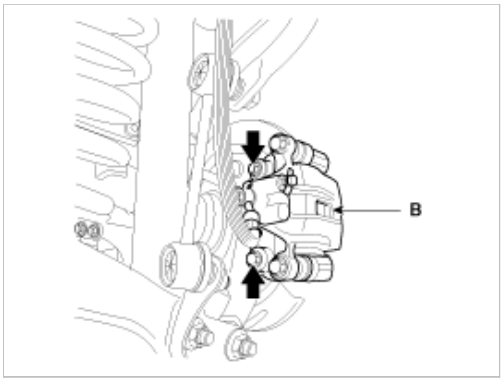

4. Remove castle nut (A) from the front hub under applying the break.

Tightening torque :
196.1 ~ 274.5N.m(20.0 ~ 28.0Kgf.m, 144.6 ~ 202.5lb.ft)

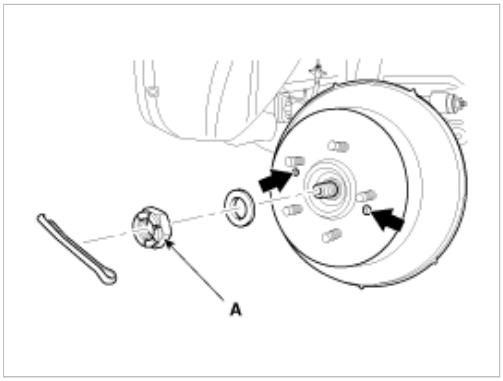

CAUTION

The washer (B) should be assembled with convex surface outward when installing the castle nut (A) and split pin (C) Also, don't reuse split pin (C) when reassembling.

mcx30.com

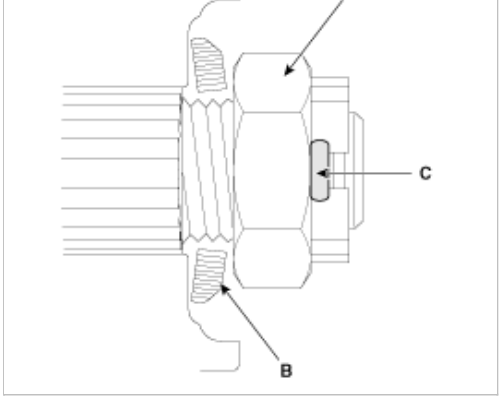

5. Remove the rear brake lining assembly (A).(Refer to BR group-Rear brake)

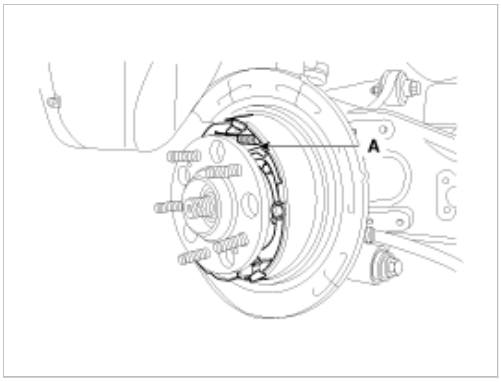

6. Remove the parking brake cable (B) from the brake shoe (A).

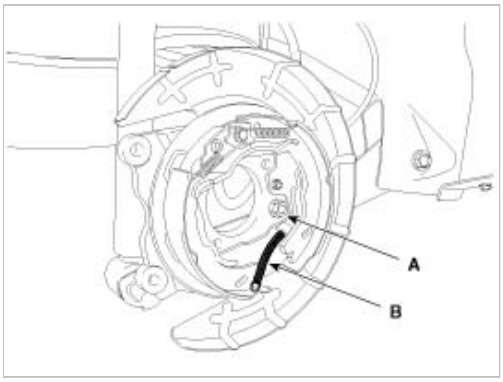

7. Remove the parking brake cable retaining (B), from the parking brake cabel (A).

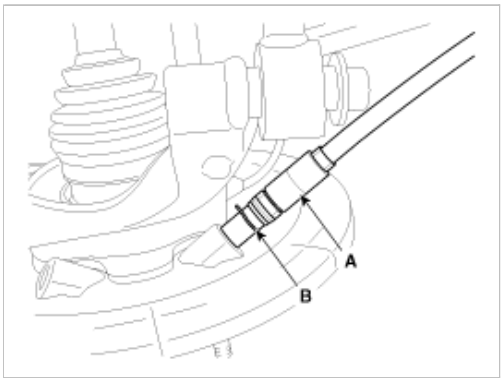

8. Remove the wheel speed sensor (A), from the knuckle.

Tightening torque :
6.8 ~ 10.8N.m(0.7 ~ 1.1Kgf.m, 5.1 ~ 7.9lb.ft)

mcx30.com

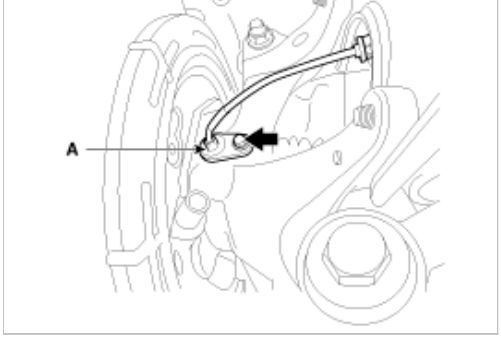

9. Remove the assist arm (A) from the rear axle carrier.

Tightening torque :
137.2 ~ 156.9N.m(14.0 ~ 16.0Kgf.m, 101.2 ~ 115.7 lb.ft)

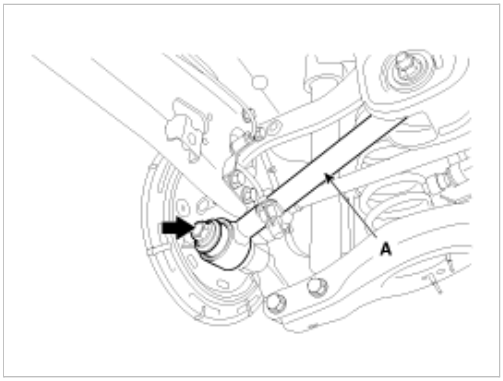

10. Remove the trailing arm (B) from the rear axle carrier.

Tightening torque :
34.3 ~ 53.9N.m(3.5 ~ 5.5Kgf.m, 25.3 ~ 39.7lb.ft)

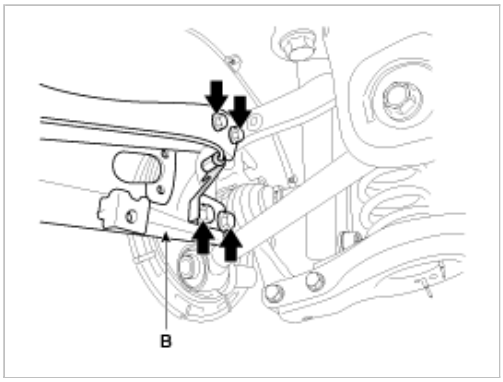

11. Remove the upper arm (A) from the rear axle carrier.

Tightening torque :
98.0 ~ 117.6N.m(10.0 ~ 12.0Kgf.m, 72.3 ~ 86.7lb.ft)

mcx30.com

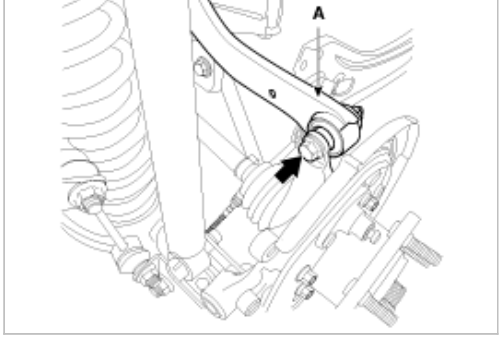

12. Push the rear axle carrier outward and separate the driveshaft (A) from the axle hub.

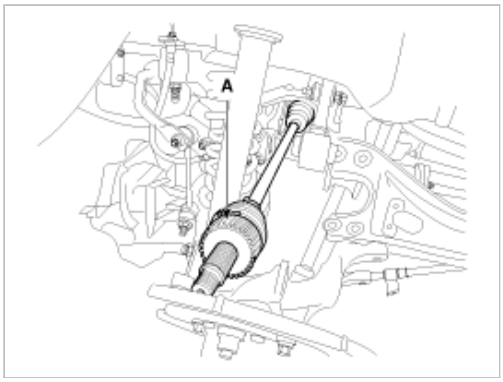

13. Insert a pry bar (A) between the differential case and joint case, and separate the driveshaft (B) from the differential case.

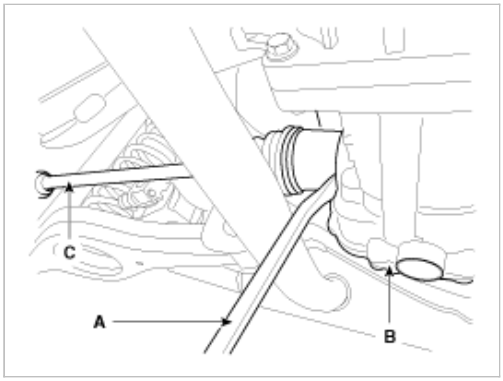

CAUTION

- Use a pry bar (A) being careful not to damage the differential and joint.
- Do not insert the pry bar (A) too deep, as this may cause damage to the oil seal.
- Do not pull the driveshaft by excessive force it may cause components inside the joint kit to dislodge resulting in a torn boot or a damaged bearing.
- Plug the hole of the differential case with the oil seal cap to prevent contamination.
- Support the driveshaft properly.
- Replace the retainer ring whenever the driveshaft is removed from the differential case.

14. Install the rear wheel & tire.
15. Check the alignment. (Refer to SSgroup 'Tires/Wheels - alingment')

Inspection

1. Check the driveshaft boots for damage and deterioration.
2. Check the ball joint for wear and damage.
3. Check the splines for wear and damage.

mcx30.com

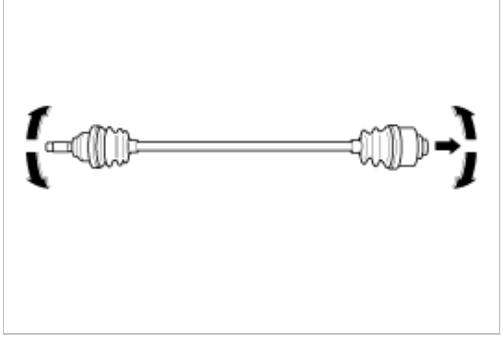

4. Check the driveshaft for cracks and wears.
5. Check the TJ outer race, inner race, cage and balls for rust or damage.
6. Check for water, foreign matter, or rust in the BJ boot.

> **CAUTION**
>
> When the BJ assembly (A) is to be reused, do not wipe away the grease.
> Check that there are no foreign substances in the grease. If necessary, clean the BJ assembly (A) and replace grease.

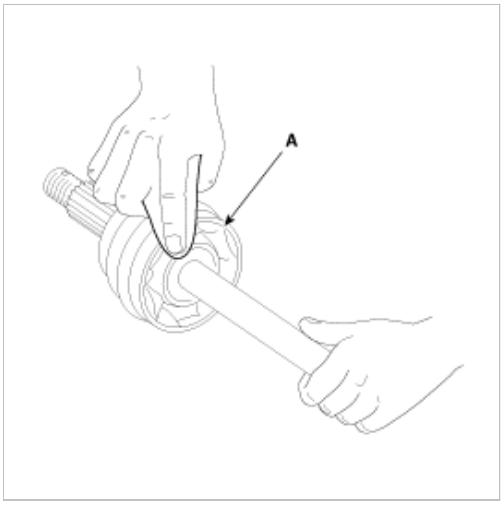

Disassembly

> **CAUTION**
>
> - Do not disassemble the BJ assembly.
> - Special grease must be applied to the driveshaft joint. Do not substitute with another type of grease.
> - The boot band should be replaced with a new one.

1. Remove the TJ boot bands and pull the TJ boot from the TJ outer race.
   (1) Using a pliers or flat-tipped (-) screwdriver, remove the LH boot band and LH TJ boot band from the driveshaft.
   (2) Remove RH boot band and RH TJ boot band in the same way of LH removal procedure.

   > **CAUTION**
   >
   > Be careful not to damage the boot.

2. Pull out the driveshaft from the TJ outer race.
3. Remove the snap ring (A) and take out the inner race(B), cage(C) and balls(D) as an assembly.

mcx30.com

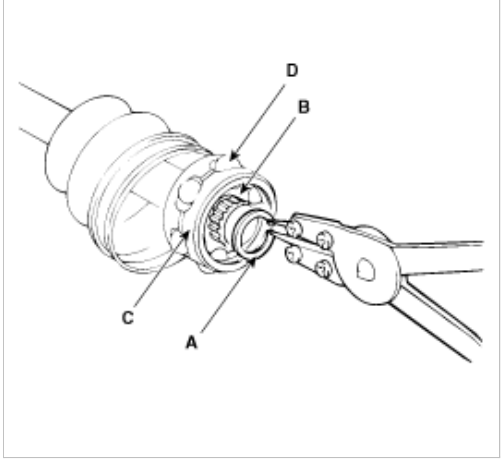

4. Clean the inner race, cage and balls without disassembling.
5. Remove the BJ boot bands and pull out the TJ boot and BJ boot.

> **CAUTION**
>
> If the boot (A) is to be reused, wrap tape(B) around the driveshaft splines(C) to protect the boot (A).

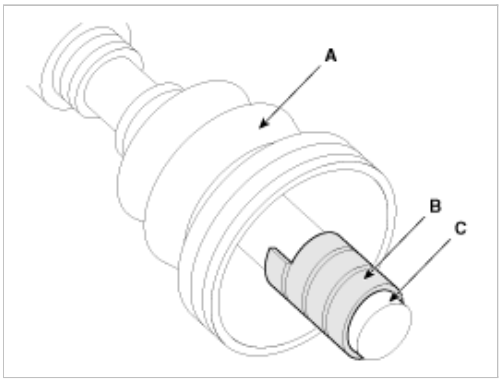

Reassembly

1. Wrap tape around the driveshaft splines (TJ side) to prevent damage to the boots.
2. Apply grease to the driveshaft and install the boots.
3. Apply the specified grease to the inner race (A) and cage (B). Install the cage (B) so that it is offset on the race as shown.

> **CAUTION**
>
> Use the grease included in the repair kit.

mcx30.com

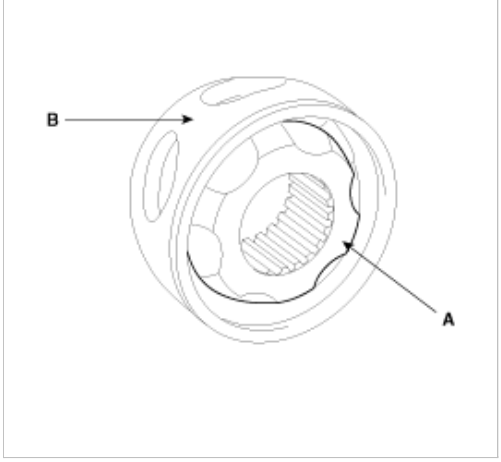

4. Apply the specified grease to the cage and fit the balls into the cage.
5. Position the chamfered side (A) as shown in the illustration. Install the inner race on the driveshaft(B), and then the snap ring.

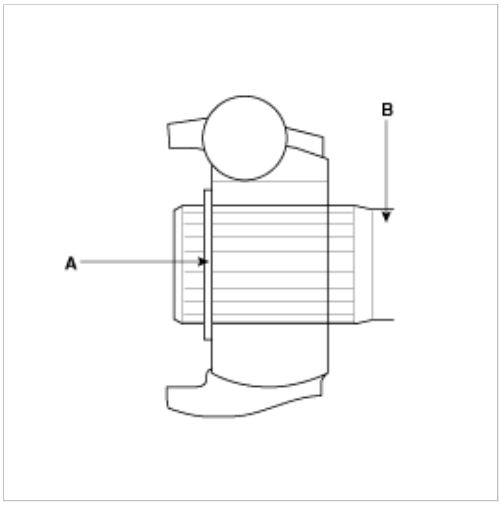

6. Apply the specified grease to the outer race and install the BJ outer race onto the driveshaft.
7. Apply the specified grease into the TJ boot and install the boot with a clip.
8. Tighten the TJ boot bands.
9. Add the specified grease to the BJ as much as wiped away at inspection.
10. Install the boots.
11. Tighten the BJ boot bands.
12. To control the air in the TJ boot, keep the specified distance between the boot bands when they are tightened.

Distance (mm)	LH	RH
ALL	699.5 +22.8/-19.3	680.3 +22.8/-19.3

Driveshaft and axle > Propeller Shaft Assembly > Propeller Shaft > Components and Components Location

Components

mcx30.com

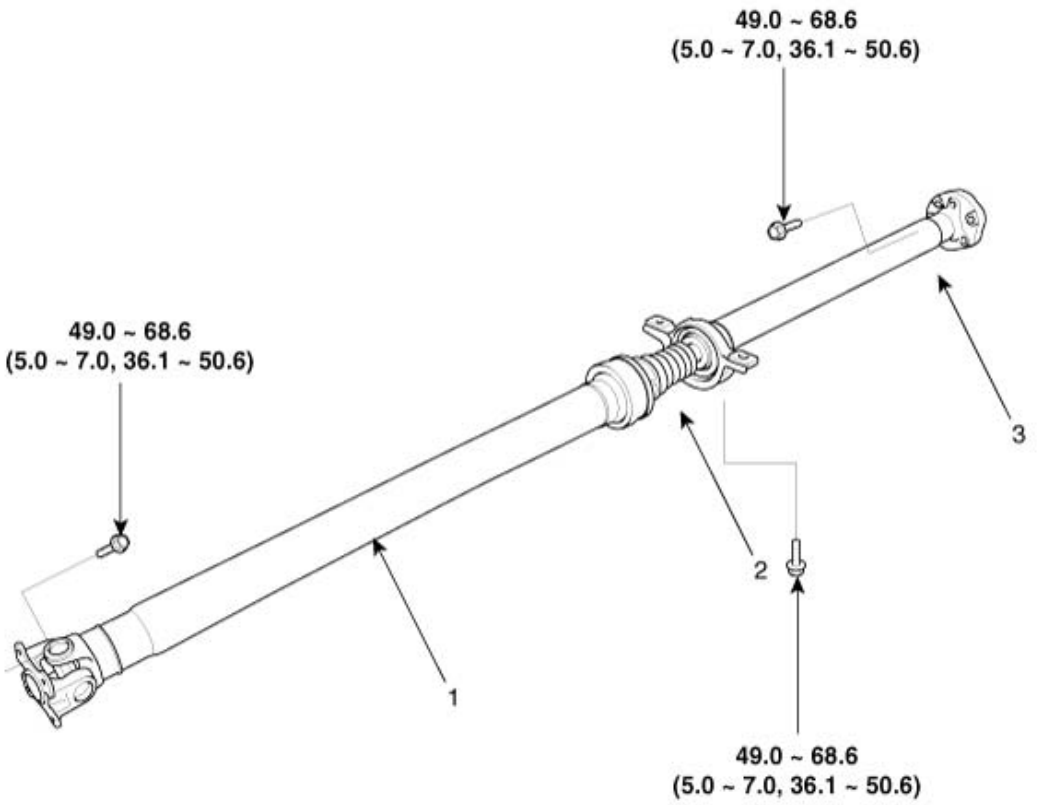

Torque : N.m (kgf.m, lb-ft)

1. Front propeller shaft 2. Center bearing bracket	3. Rear propeller shaft

Driveshaft and axle > Propeller Shaft Assembly > Propeller Shaft > Repair procedures

Inspection

CV Joint and boots

1. Shift the transmission lever to Neutral.
2. Raise the vehicle off the ground, and support it with safety stands in the proper locations.
3. Check the center bearing(B) for excessive play or rattle and rubber for rent. If the center bearing(B) has excessive play or rattle and rubber has rent, replace the propeller shaft assembly.

mcx30.com

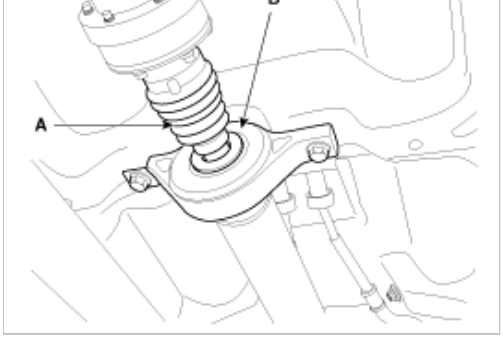

4. Check the CV joint boot (A) for damage and deterioration. If the boot is damaged or deteriored, replace the propeller shaft assembly.
5. Check the CV joint for excessive play or rattle. If the CV joint have excessive play or rattle, replace the propeller shaft assembly.

Propeller shaft runout

1. Install a dial indicator with its needle on the center of front propeller shaft or rear propeller shaft.
2. Turn the propeller shaft slowly and check the runout. Repeat this procedure for the other propeller shaft.

Front Propeller Shaft Runout : 0.3mm (0.012in.)

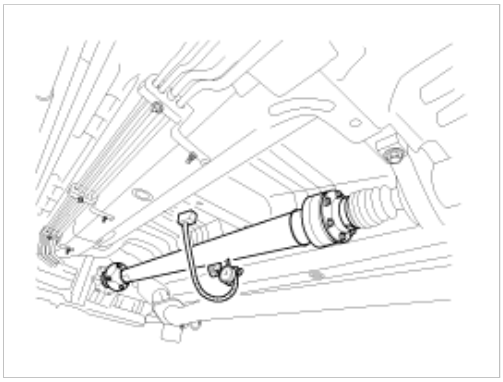

Rear Propeller Shaft Runout : 0.3mm (0.012in.)

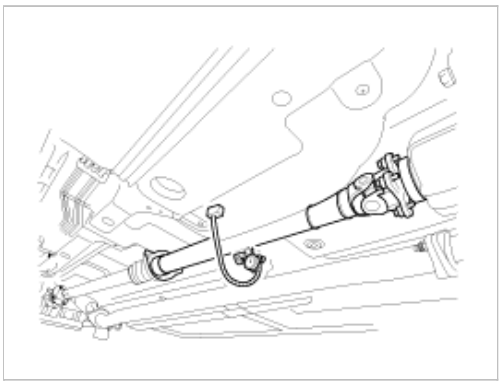

3. If the runout on either propeller shaft exceeds the service limit, replace the propeller shaft assembly.

Replacement

1. After making a match mark (B) on the flange yoke (A) and transaxle companion (C), remove the propeller shaft mounting bolts.

Tightening torque :
49.0 ~ 68.6 N.m (5.0 ~ 7.0 Kgf.m, 36.1 ~ 50.6 lb-ft)

mcx30.com

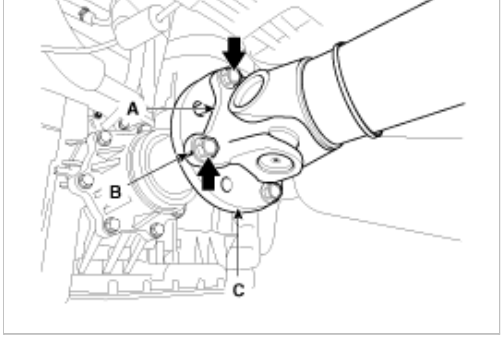

2. Remove the center bearing bracket (A) mounting bolts.

Tightening torque :
49.0 ~ 68.6 N.m (5.0 ~ 7.0 Kgf.m, 36.1 ~ 50.6 lb-ft)

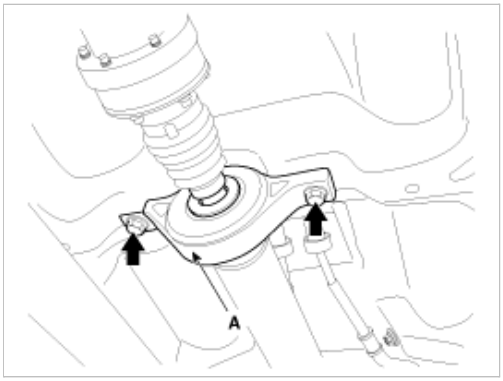

3. After making a match mark (C) on the flange yoke (A) and transaxle companion (B), remove the propeller shaft mounting bolts.

Tightening torque :
49.0 ~ 68.6 N.m (5.0 ~ 7.0 Kgf.m, 36.1 ~ 50.6 lb-ft)

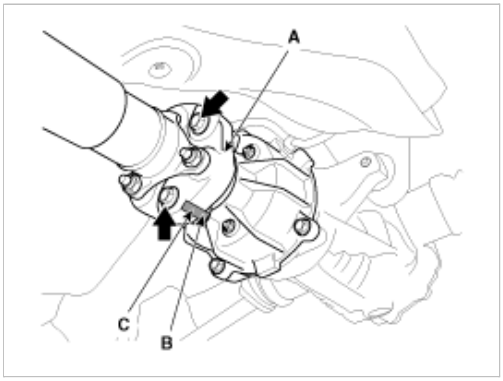

CAUTION

Use the hexagonal wrench to prevent damage of bolt head when removing bolts.

4. Install in the reverse order of removal.

Driveshaft and axle > Differential Carrier Assembly > Rear Differential Carrier > Components and Components Location

Component

mcx30.com

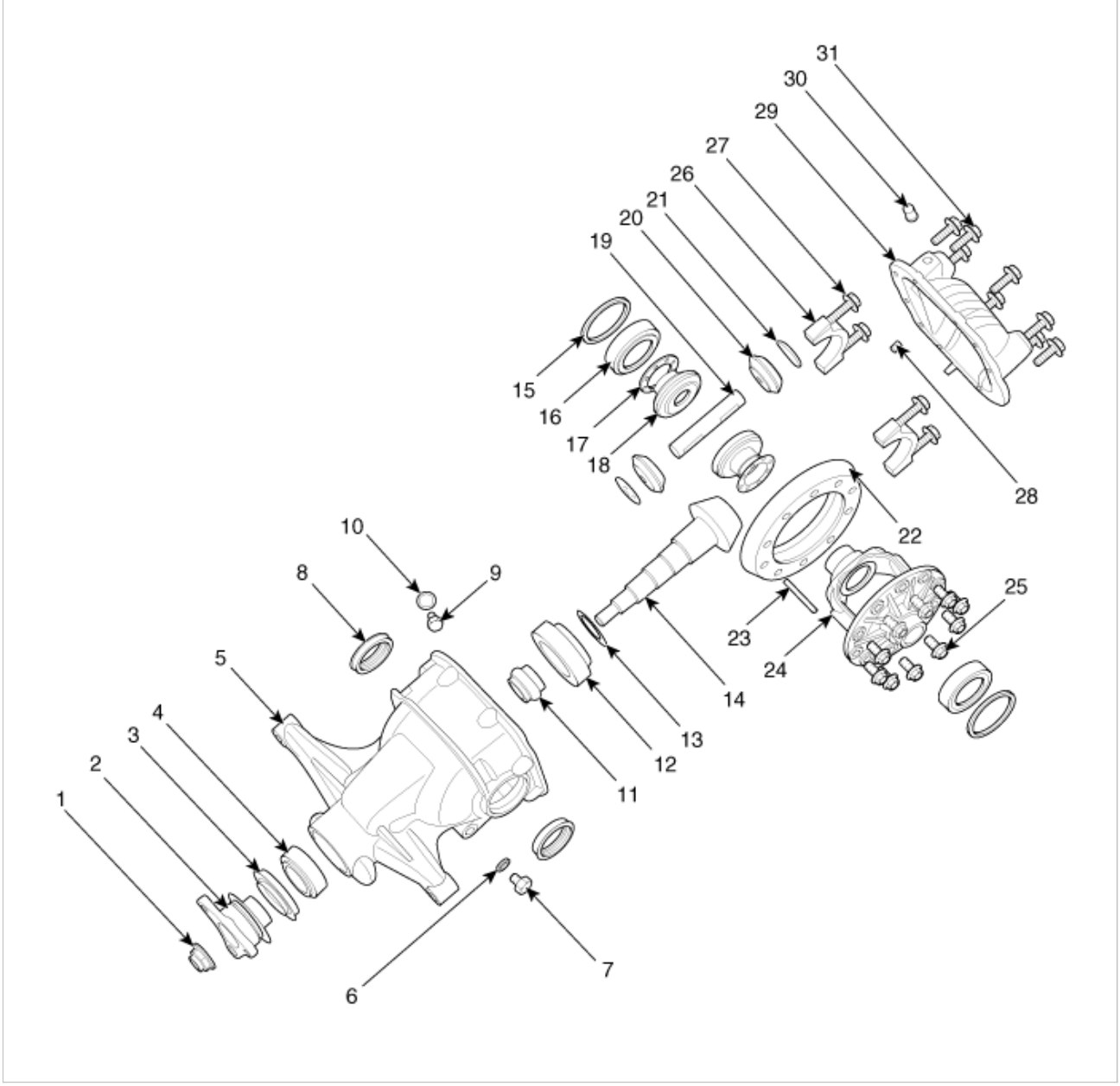

1. Drive pinion nut	12. Pinion rear bearing	24. Differential case
2. Companion flange	13. Pinion height adjusting shim	25. Ring gear bolt
3. Front oil seal	14. Drive pinion gear	26. Bearing cap
4. Pinion front bearing	15. Side bearing adjusting washer	27. Bearing cap bolt
5. Differential carrier	16. Side bearing	28. Dowel pin
6. Gasket	17. Side gear thrust washer	29. Rear cover
7. Filler plug	18. Side gear	30. Air breather
8. Side oil seal	19. Pinion mate shaft	31. Cover bolt
9. Drain plug	20. Pinion mate gear	
10. Gasket	21. Pinion mate thrust washer	
11. Pinion bearing adjusting spacer (Collapsible spacer)	22. Drive gear(Ring gear)	
	23. Lock pin	

Driveshaft and axle > Differential Carrier Assembly > Rear Differential Carrier > Repair procedures

Replacement

mcx30.com

2. Remove the rear drive shaft. (Refer to 'Rear Driveshaft Assembly')
3. Remove the propeller shaft. (Refer to 'Propeller Shaft Assembly')
4. Disconnect the coupling control connector (A).

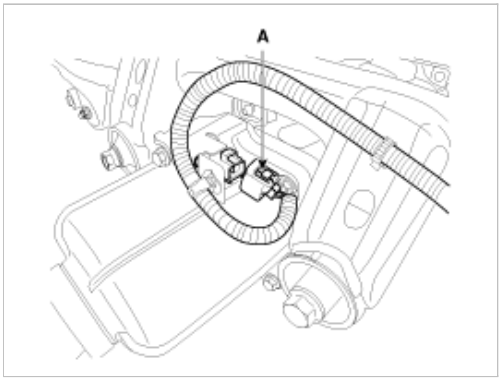

5. Support the differential assembly (A) with the jack (B).

Tightening torque :
68.6 ~ 88.3 N.m(7.0 ~ 9.0 Kgf.m , 50.6 ~ 65.1 lb.ft)

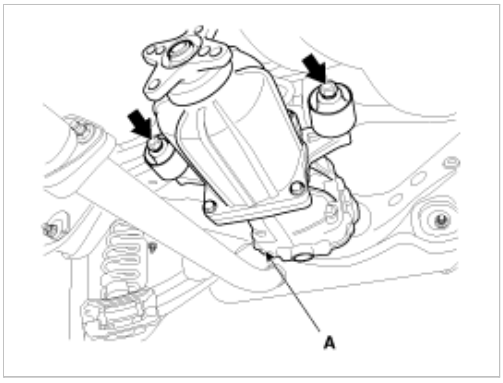

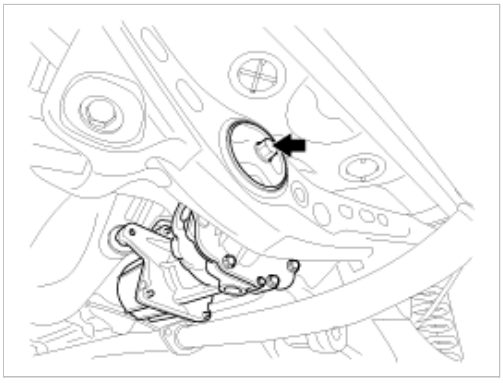

6. After loosen the cover bolt and then remove the differential cover (A).

Tightening torque :
39.2 ~ 49.0 N.m(4.0 ~ 5.0 Kgf.m , 28.9 ~ 36.2 lb.ft)

mcx30.com

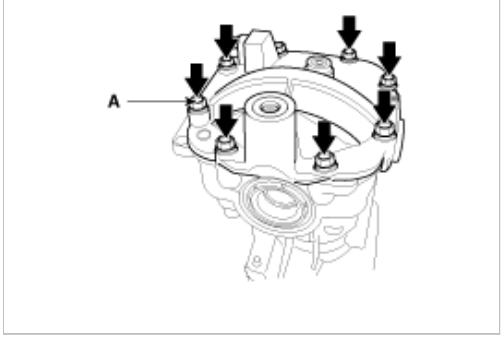

7. Install in the reverse order of removal.
8. Check the alignment. (Refer to SSgroup 'Tires/Wheels - alingment')

Inspection

Install the differential carrier assembly(A) with the special tools(09517-43401 & 09517-43500).Then carry out the following inspection.

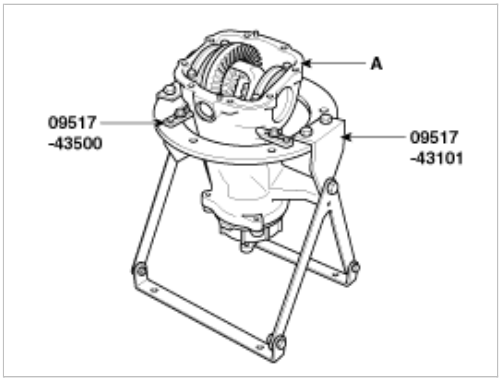

1. Check the final drive gear backlash by the following procedure.
   (1) Place the drive pinion and move the drive gear to check backlash is within the standard range.

> NOTE
>
> Measure at 4 points on the gear periphery.

Standard value :
0.10 ~ 0.15mm (0.0039 ~ 0.0059in.)

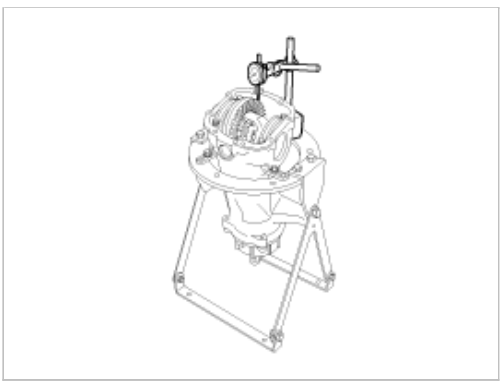

2. Check the drive gear back-face lash by the following procedure.
   (1) Place a dial gauge on the back-face of the drive gear and measure the runout.

Limit : 0.05 mm (0.002 in)

mcx30.com

(2) If the runout is beyond the limit, check that there are no foreign substances between the drive gear and differential case and, that the bolts fixing the drive gear are not loose.

3. Check the differential gear backlash by the following procedure.
   (1) Fix the side gear with a wedge so it cannot move and measure the differential gear backlash with a dial indicator on the pinion gear.

Standard value :
0 ~ 0.05 mm (0 ~ 0.002 in)

NOTE

Take the measurements at two places on the pinion gear.

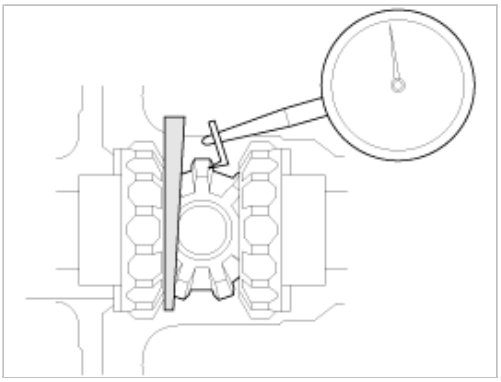

   (2) If the backlash exceeds the limit, adjust using side bearing spacers.

NOTE

If adjustment is impossible, replace the side gear and pinion gear as a set.

4. Check the tooth contact of the final drive gear by the following procedure.
   (1) Apply the same amount of machine blue slightly to both surfaces of the drive gear teeth.

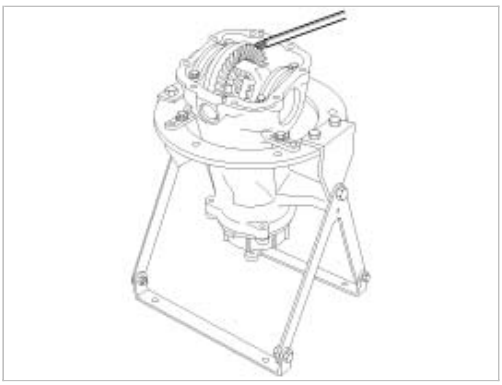

   (2) Insert a brass rod between the differential carrier and the differential case, and then rotate the companion flange by hand (once in the normal direction, and then once in the reverse direction) while applying a load to the drive gear so

mcx30.com

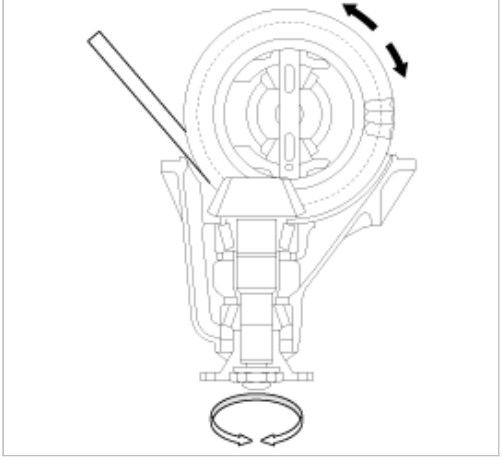

CAUTION

If the drive gear is rotated too much, the tooth contact pattern will become unclear and difficult to check.

(3) Check the tooth contact pattern.

Tooth contact	Contact state	Solution	
Standard contact	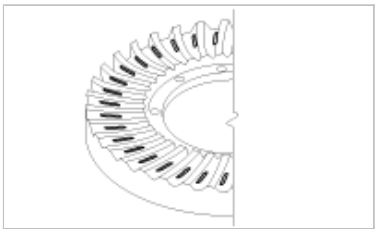		
1. Heal contact	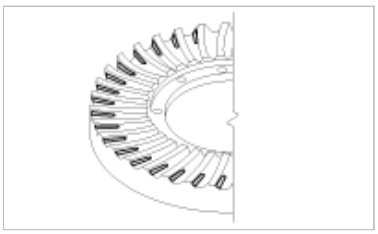	Increase the thickness of the pinion height adjusting shim, and position the drive pinion closer to the center of the drive gear. Also, for backlash adjustment, reposition the drive gear further from the drive pinion.	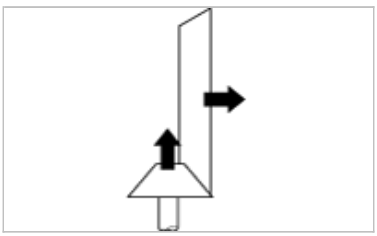
2. Face contact	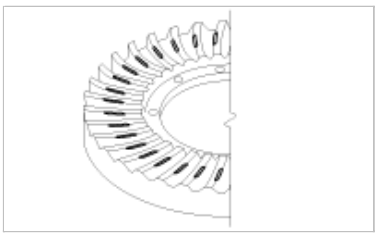		
3. Toe contact	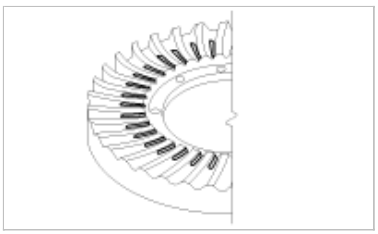	Decrease the thickness of the pinion height adjusting shim, and position the drive pinion further from the center of the drive gear. Also, for backlash adjustment, reposition the drive gear closer to the drive pinion.	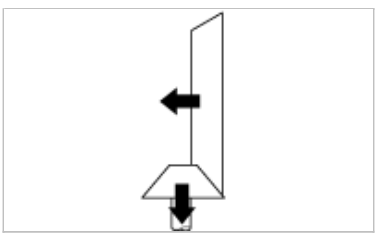
4. Flank contact			

mcx30.com

	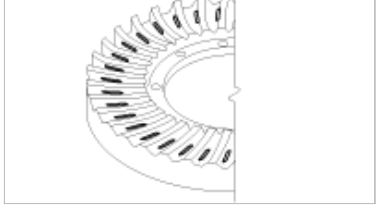		

NOTE

- Tooth contact pattern is a method for judging the result of the adjustmentof drive pinion height and final drive gear backlash. The adjustment of drivepinion height and final drive gear backlash should be repeated until the toothcontact patterns are similar to the standard tooth contact pattern.
- When you cannot obtain a correct pattern, the drive gear and drive pinionhave exceeded their limits. Both gears should be replaced as a set.

5. Check the oil leaks and the lip part for chew or wear.
6. Check the bearings for wear or discoloration.
7. Check the gear carrier for cracks.
8. Check the drive pinion and drive gear for wear or cracks.
9. Check the side gears, pinion gears and pinion shaft for wear or damage.
10. Check the side gear spline for wear or damage.

mcx30.com